GB24 & GB30
Series III
Propane
User & Installation Instructions

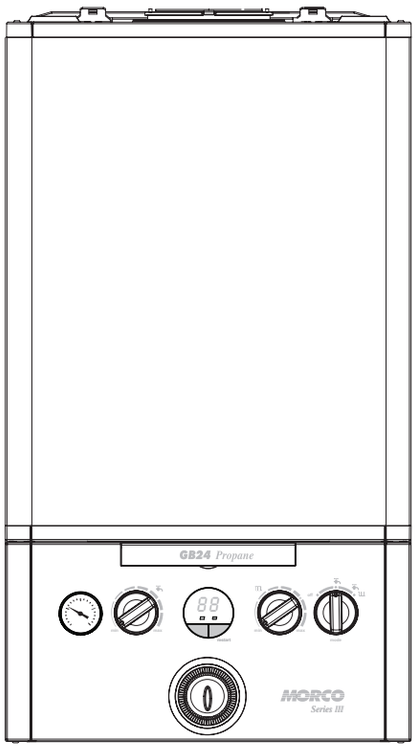

BOILER OUTPUT

To Domestic Hot Water:

GB24-Propane Minimum 4.9 kW (16,600 Btu/h)
GB30-Propane Minimum 6.1 kW (20,700 Btu/h)
GB24-Propane Maximum 24.2 kW (82,570 Btu/h)
GB30-Propane Maximum 30.3 kW (103,384 Btu/h)

To Central Heating:

GB24-Propane Minimum 4.9kW (16,600 Btu/h)
GB30-Propane Minimum 6.1 kW (20.700 Btu/h)
GB24-Propane Maximum 17.2 kW (58,728 Btu/h)
GB30-Propane Maximum 20.4 kW (69,607 Btu/h)

Morco House, Riverview Road, Beverley, East Yorkshire, HU17 0LD
Morco Products Ltd
Tel: 01482 325456 Fax: 01482 212869
Website: www.morcoproducts.co.uk

UIN 220216 A02
April 2019

ERP DATA

			MODEL	
	SYMBOL	UNITS	24	30
Condensing Boiler	n/a	n/a	yes	yes
Low Temperature Boiler	n/a	n/a	no	no
B1 Boiler	n/a	n/a	no	no
Cogeneration Space Heater	n/a	n/a	no	no
Equipped with a Supplementary Heater	n/a	n/a	no	no
Combination Heater	n/a	n/a	yes	yes
Nominal Heat Output for Space Heating				
Full Load	P_4	kW	17.2	20.4
Part Load	P_1	kW	5.6	5.7
Auxiliary Electricity Consumption				
Full Load	el_{max}	kW	0.025	0.024
Part Load	el_{min}	kW	0.013	0.013
Standby	P_{SB}	kW	0.003	0.003
Seasonal Space Heating Energy Efficiency				
Full Load	η_4	%	91.7	92.0
Part Load	η_1	%	99.2	100.4
Standby Loss	P_{stby}	kW	0.050	0.050
Ignition	P_{ign}	kW	0	0
Emissions Gross	NO_x	mg/kWh	32	38
Annual Energy Consumption	Q_{HE}	GJ	53	61
Sound Power Level, Indoors	L_{WA}	dB	42	39
Domestic Hot Water				
	AEC	kWh	26	
	AFC	GJ	6	

All Gas Safe Register installers carry a Gas Safe Register ID card, and have a registration number. You can check your installer by calling Gas Safe Register direct on 0800 4085500.

PRODUCT FICHE

MORCO COMBINATION BOILER
Morco Products Ltd
ERP DATA

	SYMBOL	UNITS	MODEL	
			24	**30**
Condensing boiler			Yes	
Seasonal Space heating efficiency class			A	
Rated heat output		kW	17	20
Seasonal space heating energy efficiency	η_s	%	94*	95
Annual energy consumption	Q_{HE}	GJ	53	61
Sound power level, indoors	L_{WA}	dB	42	39
Water heating energy efficiency class			A	

Seasonal Space Heating Energy Efficiency of the Boiler	*%	**A**
Temperature control (from fiche of temperature control)	%	**B**

Class I	*Class II*	*Class III*	*Class IV*	*Class V*	*Class VI*	*Class VII*	*Class VIII*
1%	*2%*	*1.5%*	*2%*	*3%*	*4%*	*3.5%*	*5%*

Solar Contribution (from fiche of solar device)

Collector Size (in m²)	Tank Volume (in m³)	Collector Efficiency (in %)	Tank rating A* = 0.95 A = 0.91 B = 0.86 C = 0.83 D-G = 0.81

= ('*III*' x [ ] + '*IV*' x [ ]) x 0.9 x ([ ] / 100 x [ ] = [ ] % **C**

Seasonal Space Heating Energy Efficiency of Package **TOTAL: A+B+C=** [ ] %

Seasonal Space Heating Energy Efficiency Class of Package

G	F	E	D	C	B	A	A+	A++	A+++
< 30%	≥ 30%	≥ 34%	≥ 36%	≥ 75%	≥ 82%	≥ 90%	≥ 98%	≥ 125%	≥ 150%

The energy efficiency of the package of products provided for in this document may not correspond to its actual energy efficiency once installed in a building, as the efficiency is influenced by further factors such as heat loss in the products in relation to the building size and its characteristics

Morco GB24 & GB30 *Series III*

Combination Boiler

Destination Country:

BE = Belgium
CH = Switzerland
CZ = Czech Republic
DE = Germany
ES = Spain
FR = France
GB = UK
GR = Greece
IE = Ireland
IT = Italy
NL = Netherlands
PL = Poland
PT = Portugal
SI = Slovenia

CONTENTS

1 Users Instructions 6
2 Specifications 10
3 Technical Data 12
4 General Installation Requirements 14
5 Installation Instructions 16
6 Commissioning Instructions 25
7 Servicing Schedule 27
8 Fault Codes 33
9 Combustion Checks 39
10 Warranty Conditions 41

FOR ANY QUERIES PLEASE RING THE MORCO CONSUMER HELPLINE : 01482 325456

NOTE. To restart the boiler press the restart button. The boiler will repeat the ignition sequence if a heat demand is present.

1 USERS INSTRUCTIONS

1.1 INTRODUCTION

The **Morco GB** ***Series III*** is a wall mounted, room sealed, condensing combination boiler, featuring full sequence automatic spark ignition and fan assisted combustion.

Due to the high efficiency of the boiler, condensate is produced from the flue gases and this is drained to a suitable disposal point through a plastic waste pipe at the base of the boiler. A condensate 'plume' will also be visible at the flue terminal.

The **Morco GB** ***Series III*** is a combination boiler providing both central heating and instantaneous domestic hot water.

1.2 SAFETY

Current Gas Safety (Installation & Use) Regulations or rules in force.

In your own interest, and that of safety, it is the law that this boiler must be installed by a Gas Safe Registered engineer in the UK, in accordance with the above regulations.

In other countries the installation must be carried out by a qualified and competent Gas Installer. In the approved country the boiler is installed, this must be in accordance with their current rules in force.

It is essential that the instructions in this booklet are strictly followed, for safe and economical operation of the boiler.

1.3 ELECTRICITY SUPPLY

This appliance must be earthed.

Supply: 230 V ~ 50 Hz. The fusing should be 3A.

1.4 IMPORTANT NOTES

- This appliance must not be operated without the casing correctly fitted and forming an adequate seal.
- If the boiler is installed in a compartment then the compartment MUST NOT be used for storage purposes.
- If it is known or suspected that a fault exists on the boiler then it MUST NOT BE USED until the fault has been corrected by a Gas Safe Registered Engineer or in other countries a qualified and competent Gas Installer.
- Under NO circumstances should any of the sealed components on this appliance be used incorrectly or tampered with.
- This appliance can be used by children from 8 years and above and persons with reduced physical, sensory or mental capabilities or lack of experience and knowledge if they have been given supervision or instruction concerning use of the appliance in a safe way and understand the hazards involved. Children shall not play with the appliance. Cleaning and user maintenance shall not be made by children without supervision.
- Children should be supervised to ensure that they do not play with the appliance.

In cases of repeated or continuous shutdown a Gas Safe Registered Engineer, or in other countries a qualified and competent Gas Installer, should be called to investigate and rectify the condition causing this and carry out an operational test. Only the manufacturers parts are to be used for replacement.

1.5 MINIMUM CLEARANCES

Clearances of 165mm above, 100mm below, 2.5mm at the sides and 450mm at the front of the boiler casing must be allowed for servicing.

Bottom clearance
Bottom clearance after installation can be reduced to 5mm.

This must be obtained with an easily removable panel, to provide the 100mm clearance required for servicing.

1.6 TO OPERATE THE BOILER

Refer to Boiler Controls

TO START THE BOILER

Start the boiler as follows:

1. Check that the electricity supply to boiler is off.
2. Set the mode knob (C) to '**OFF**'.
3. Set the Domestic Hot Water temperature knob (A) and Central Heating temperature knob (B) to '**e**'.
4. Ensure that all hot water taps are turned off.
5. Switch on electricity to the boiler and check that all controls, e.g. timer and room thermostat, are on.
6. Set the mode knob (C) to ' ' (winter).

The boiler will commence ignition sequence, supplying heat to the central heating, if required.

Note. *In normal operation the boiler status display (D) will show codes:*

00	*Standby - no demand for heat.*
CH "80†"	*Central Heating being supplied*
dH "60†"	*Domestic hot water being supplied*
FP "10†"	*Boiler frost protection-boiler will fire if temperature is below 5°C.*

† = temperature shown for example purposes only

During normal operation the burner on indicator (F) will remain illuminated when the burner is lit.

Note: If the boiler fails to light after five attempts the fault code L2 will be displayed (refer to Fault Code page).

1.7 RESTART PROCEDURE

To restart the boiler, press the restart button. The boiler will repeat the ignition sequence if a heat demand is present. If the boiler still fails to light consult a Gas Safe Registered Engineer, or in other countries a qualified and competent Gas Installer.

1.8 OPERATION

Winter Conditions - (Central Heating and Domestic Hot Water required)

Set the mode knob (C) to ' ' (winter).

The boiler will fire and supply heat to the radiators but will give priority to domestic hot water on demand.

Summer Conditions - (Domestic Hot Water only required)

Set the mode knob (C) to ' ' (summer).

Set the central heating demand on the external controls to OFF.

Boiler Off

Set the mode knob (C) to '**OFF**'. The boiler mains power supply must be left on to enable frost protection (see Frost Protection).

***Note**. The pump will operate briefly as a self-check once every 24 hours, regardless of system demand.*

Control of water temperature

Domestic Hot Water

The DHW temperature is limited by the boiler controls to 65°C maximum at low draw-off rate, adjustable via the DHW temperature control (A).

Due to system variations and seasonal temperature fluctuations DHW flow rates/temperature rise will vary, requiring adjustment at the draw off tap : the lower the rate the higher the temperature, and vice versa.

Approximate temperatures for domestic hot water:

Knob Setting	Hot Water Temperature (approx.)
Minimum	40ºC
Maximum	65ºC

Central Heating

The boiler controls the central heating radiator temperature to a maximum of 80°C and a minimum of 30ºC, adjustable via the CH temperature control (B).

The boiler is a high efficiency combination boiler which is most efficient when operating in condensing mode.

The boiler will operate in this mode if the CH temperature control (C) is set to the 'e' position (economy mode). This control should be set to maximum for very cold periods.

1.9 TO SHUT DOWN THE BOILER

Set the mode knob control to "off".

1.10 WINTERISATION

If the holiday home or park home is to be left unoccupied during cold periods when there is a threat of freezing, the domestic hot and cold water circuits must be drained as follows:

- Turn off the cold water supply
- Open all hot and cold water taps
- Open all drain plugs in the hot and cold water system (do not drain the central heating circuit, which should have been filled with antifreeze if installed in a caravan holiday home or park home).

For more detailed information on winterisation please refer to:

- The winterisation fact sheet under troubleshooting at www.morcoproducts.co.uk
- The holiday home owners handbook

Please note there are no drain plugs on the boiler. Leave all taps and drain plugs open until next use to allow any residual water to continue to drain.

When installed in a Caravan Holiday Home or Park Home the heating circuit and radiators should be filled with an approved antifreeze (see section 4.8). The level of antifreeze should be checked annually by a competent person. If the home is occupied during very cold and freezing weather, the central heating should be run continuously and the room stat or thermostatic radiator valves set at a minimum of 15ºC.

If the home is unoccupied for even a short period, the hot and cold water system must be drained down. This is the only way to guarantee against frost damage.

ALL FROST DAMAGE IS OUTSIDE OF THE WARRANTY.

1.11 BOILER OVERHEAT PROTECTION

The boiler controls will shut down the boiler in the event of overheating. Should this occur, a fault code L1 will be displayed.

Refer to fault chart.

1.12 FLAME FAILURE

Should this occur a fault code F2/L2 will be displayed. Refer to fault chart.

continued . . . . . .

1.13 BOILER CONTROLS

Legend

A. Domestic Hot Water Temperature Knob
B. Central Heating Temperature Knob
C. Mode Knob
D. Boiler Status Display
E. Function Button
F. Burner 'on' Indicator
G. Restart button
H. Central Heating Economy Setting
J. Pressure Gauge
K. Timer

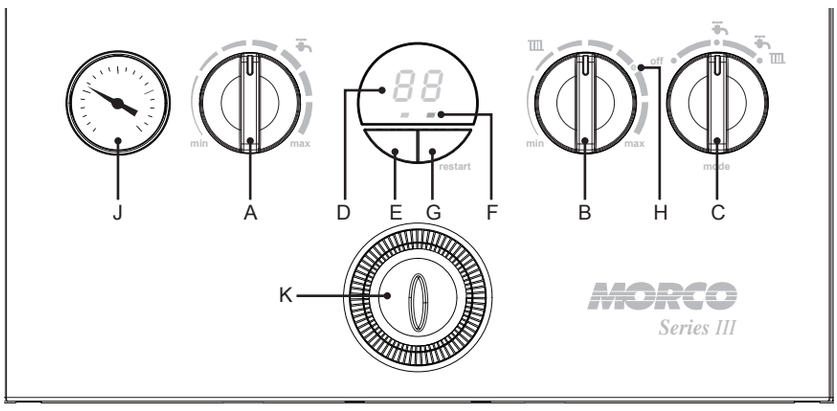

1.14 LOSS OF SYSTEM WATER PRESSURE

The pressure gauge indicates the central heating system pressure. If the pressure is seen to fall below the original installation pressure of 1-2 bar over a period of time then a water leak may be indicated. In this event re-pressurise the boiler. If unable to do so or if the pressure continues to drop a Gas Safe Registered Engineer, or in other countries a qualified and competent Gas Installer should be consulted.

INDICATED BY "F1" (LOW WATER PRESSURE) - THE BOILER WILL NOT OPERATE IF THE PRESSURE HAS REDUCED TO LESS THAN 0.3 BAR UNDER THIS CONDITION.

1.15 CONDENSATE DRAIN

This appliance is fitted with a siphonic condensate trap system that reduces the risk of the appliance condensate from freezing. However should the condensate pipe to this appliance freeze, please follow these instructions:

a. If you do not feel competent to carry out the defrosting instructions below please call your local Gas Safe Registered Engineer, or in other countries a qualified and competent Gas Installer for assistance.

b. If you do feel competent to carry out the following instructions please do so with care when handling hot utensils. Do not attempt to thaw pipework above ground level.

If this appliance develops a blockage in its condensate pipe, its condensate will build up to a point where it will make a gurgling noise prior to locking out an "L2" fault code. If the appliance is restarted it will make a gurgling noise prior to it locking out on a failed ignition "L2" code.

To unblock a frozen condensate pipe;

1. Follow the routing of the plastic pipe from its exit point on the appliance, through its route to its termination point.

   Locate the frozen blockage. It is likely that the pipe is frozen at the most exposed point external to the building or where there is some obstruction to flow. This could be at the open end of the pipe, at a bend or elbow, or where there is a dip in the pipe in which condensate can collect. The location of the blockage should be identified as closely as possible before taking further action.

2. Apply a hot water bottle, microwaveable heat pack or a warm damp cloth to the frozen blockage area. Several applications may have to be made before it fully defrosts. Warm water can also be poured onto the pipe from a watering can or similar. DO NOT use boiling water.

3. Caution when using warm water as this may freeze and cause other localised hazards.

4. Once the blockage is removed and the condensate can flow freely, restart the appliance. (Refer to "To Operate the boiler")

5. If the appliance fails to ignite, call your Gas Safe Registered Engineer, or in other countries a qualified and competent Gas Installer.

Preventative solutions:

During cold weather, set the 'radiator symbol' to maximum. (Must return to original setting once cold spell is over.)

Place the heating on continuous and turn the room stat down to 15ºC overnight. (Return to normal after cold spell.)

1.16 ESCAPE OF GAS

Should a gas leak or fault be suspected contact the Gas Supplier without delay**. TURN OFF ALL GAS SUPPLIES.**

Do NOT search for gas leaks with a naked flame.

1.17 CLEANING

For normal cleaning simply dust with a dry cloth.

To remove stubborn marks and stains, wipe with a damp cloth and finish off with a dry cloth.

DO NOT use abrasive cleaning materials.

1.18 MAINTENANCE

The appliance should be serviced at least once a year by a Gas Safe Registered Engineer, or in other countries a qualified and competent Gas Installer.

1.19 MECHANICAL 24 HOUR TIMER

PROGRAMMING THE TIMER

1. Decide what times you would like the timeswitch to switch ON and OFF.
2. Push segments towards the programme ring for an OFF period and push away from ring for an ON period. The minimum switching interval is 15 minutes and this can be increased in 15 minute steps.
3. Bring the timeswitch into the correct condition by manually turning the programme ring clockwise through a 24 hour cycle.
4. Turn the programme ring clockwise until the correct time of day on the ring lines up with the time indicator.

Note. The segment dial can be turned when the time controller is operating. In case of power failure, re-adjust the time controller to the correct time of day, turning the dial in a clockwise direction.

Permanent Override

By rotating the central switch so that the symbol (1) lines up with the operating mode indicator (▼) the unit will be permanently ON.

With the symbol (◷) lining up with the operating mode indicator (▼) the unit acts as a timeswitch.

With the symbol (▯) lining up with the operating mode indicator (▼) the unit will be permanently OFF.

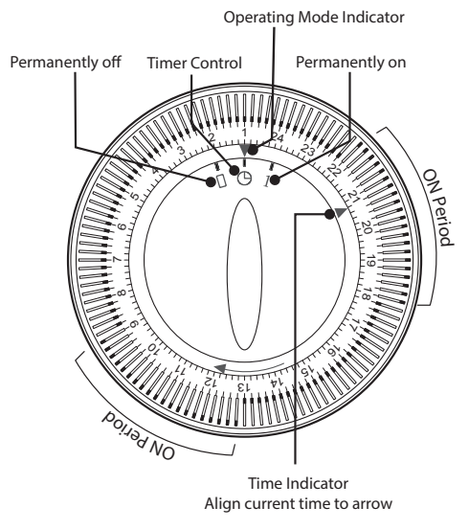

1.20 POINTS FOR THE BOILER USER

Note. *In line with our current warranty policy we would ask that you check through the Troubleshooting guide to identify any problems external to the boiler prior to requesting a service engineers visit. Should the problem be found to be other than with the appliance we reserve the right to levy a charge for the visit, or for any pre-arranged visit where access is not gained by the engineer.*

1.21 TROUBLESHOOTING

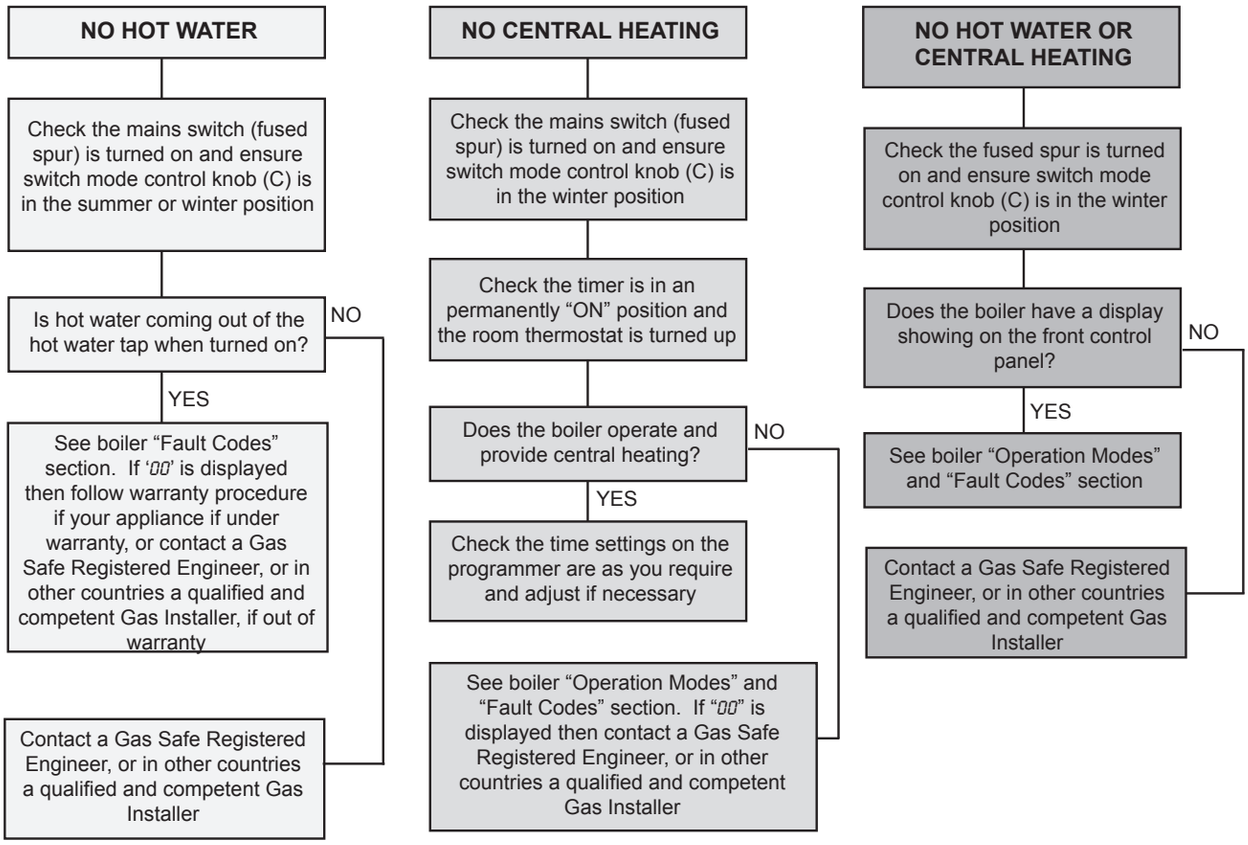

1.22 OPERATION MODES

Note. *The display alternates between display code and current temperature*

DISPLAY CODE ON BOILER	DESCRIPTION
00	The boiler is in standby operation awaiting either a central heating call or hot water demand.
CH 80 †	The boiler has a call for central heating but the appliance has reached the desired temperature set on the boiler.
dH 60 †	The boiler has a call for hot water but the appliance has reached the desired temperature set on the boiler.
CH 80 †	The boiler is operating in central heating mode.
dH 60 †	The boiler is operating in domestic hot water mode.
FP 10 †	The boiler is operating in frost protection.
- -	The boiler mode knob (C) is in the off position, rotate fully clockwise for hot water and central heating operation.

† = temperature shown for example purposes only.

2 SPECIFICATIONS

2.1 GENERAL SPECIFICATIONS

The **Morco GB** ***Series III*** range of boilers are wall mounted, full sequence, automatic spark ignition low water content, fanned flue, high efficiency condensing combination boilers.

Note. Due to the high efficiency of the boiler a plume of water vapour will be visible from the terminal during operation. The boiler is supplied for use with Propane only at 37mbar (30 mbar for DE) supply pressure. It is particularly suitable for caravan holiday home and park home use.

Maximum heat output in heating mode for the GB24 is 17.2kW (59,030 Btu/hr) with 24.2kW (82,570 Btu/hr) available for hot water production.

Maximum heat output in heating mode for the GB30 is 20.4kW (69,607 Btu/hr) with 30.3kW (103,384 Btu/hr) available for hot water production.

The boiler can be supplied with a standard concentric flue with additional extensions, flue deflector and vertical flue kits available as optional extras. The only flue that can be fitted are those detailed in this instruction manual.

The boiler is suitable for connection to fully pumped, sealed heating systems ONLY. Adequate arrangements for completely draining the system by provision of drain cocks must be provided in the installation pipework.

The boiler contains the following components:

Cast Aluminium Heat Exchanger
Domestic Hot Water Plate Heat Exchanger
Diverter Valve
Circulating Pump
Pressure Gauge
Safety Valve and Central Heating Expansion Vessel
Automatic Bypass
Daily Pump and Diverter Valve Exercise
Mechanical 24hr Timer

The boiler temperature controls are visible, located in the control panel. These enable the user to control both CH and DHW temperatures independently. Operating and fault codes are displayed on the status panel.

2.2 SCHEMATIC DIAGRAM

1. Expansion Vessel
2. Pump
3. Pressure Relief Valve
4. Water Pressure Switch
5. Flow Thermistor
6. Return Thermistor
7. Divertor Valve
8. Fan
9. Venturi
10. DHW Plate Heat Exchanger
11. Ignition Electrode / Flame Detection Electrode
12. Gas Valve
13. Siphon / Trap
14. DHW Flow Turbine
15. Sump Cover
16. Injector Housing

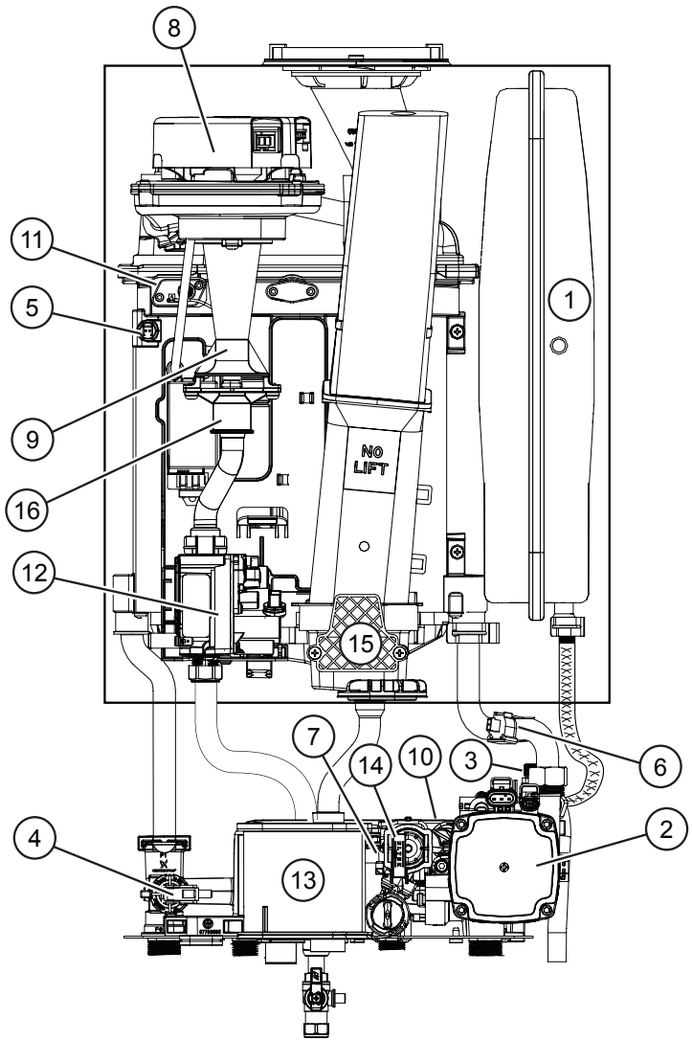

2.3 WIRING DIAGRAM

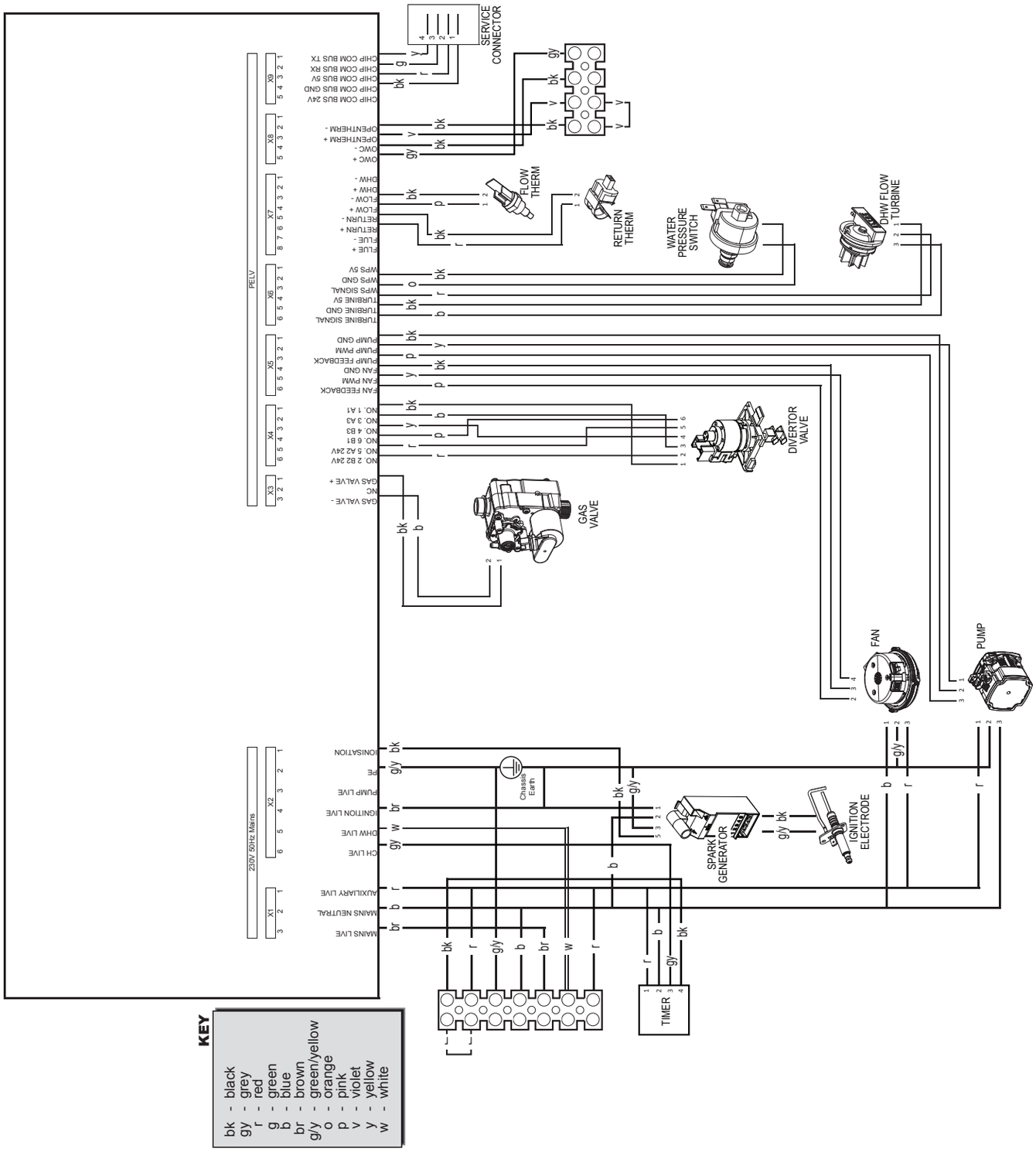

3 TECHNICAL DATA

3.1 DATA TABLES

Table 1 General Data

Morco GB Series III			24	30
Gas Supply			II_{2H3P} - G31 - 37mbar (I_{3P} G31 - 30mbar DE)	
Gas Supply Connection			15mm copper compression	
Injector Size		mm	3.3	3.75
Inlet Connection		Domestic Hot Water	G ½	
Outlet Connection		Domestic Hot Water	G ½	
Flow Connection		Central Heating	G ¾	
Return Connection		Central Heating	G ¾	
Flue Terminal Diameter		mm	100	
Average Flue Temp-Mass Flow Rate		DHW	63ºC - 11g/s	68ºC - 13 g/s
Maximum Working Pressure (Sealed Systems)		bar (lb/in²)	2.5 (36.3)	
Maximum Domestic Hot Water Inlet Pressure		bar (lb/in²) (kPa)	10.0 (145) (1000)	
Minimum Domestic Hot Water Inlet Pressure*		bar (lb/in²) (kPa)	0.8 (11.6) (80)	1.3 (18.9) (130)
Electrical Supply			230 V - 50 Hz.	
Power Consumption		W	79	79
Fuse Rating			External : 3A Internal : T4H HRC L250 V	
Water Content	Central Heating	litre (gal)	1.2 (0.26)	
Domestic Hot Water litre (gal)		litre (gal)	0.5 (0.11)	
Packaged Weight		kg	32.9	32.9
Maximum Installation Weight		kg	30	30
Boiler Casing Size	Height	mm	700	
	Width	mm	395	
	Depth	mm	285	

**Required for maximum flow rate. Boiler operates down to 2 l/min DHW delivery*

Table 2 - Performance Data - Central Heating

			Max.		Min.	
Boiler Input :			24	**30**	**24**	**30**
Boiler Input 'Q'	Nett CV	kW	17.3	20.4	4.9	6.1
		Btu/h	59030	69607	16720	20814
	Gross CV	kW	18.8	22.2	5.3	6.6
		Btu/h	64148	75749	18084	22520
Gas Consumption		m³/h	0.71	0.82	0.20	0.25
		ft³/h	25.1	29.0	7.1	8.8
Boiler Output :						
Non Condensing		kW	17.2	20.4	4.9	6.1
70ºC Mean Water temp.		Btu/h	58688	16720	16720	20814
Condensing		kW	18.2	21.6	5.15	6.45
40ºC Mean Water temp.		Btu/h	62100	73702	17572	22008
Seasonal efficiency*	SEDBUK 2005		24kW = 91.0 30kW = 91.1			
Seasonal efficiency*	SEDBUK 2009		24kW = 88.9 30kW = 89.5			
NOx Classification			CLASS 6			

Table 3 - Performance Data - Domestic Hot Water

Maximum DHW Input :		24	30
Nett CV	kW	24.3	30.4
	Btu/h	82,912	103,725
Gross CV	kW	26.4	33
	Btu/h	90,077	112,596
Gas Consumption	m³/h	1.00	1.25
	ft³/h	35.33	44.20
	kg/hr	1.83	2.26
Maximum	kW	24.2	30.3
DHW Output	Btu/h	82,570	103,384
DHW Flow Rate at 35°C temp. rise.	l/min	9.9	12.4
	gpm	2.2	2.8
DHW Specific Rate	l/min	11.5	14.5
	gpm	2.5	3.2

* The value is used in the UK Government's Standard Assessment Procedure (SAP) for energy rating of dwellings. The test data from which it has been calculated have been certified by a notified body.

Note. *Gas consumption is calculated using a calorific value of 95.65 MJ/m³ (2569 Btu/ft³) gross or 88.0 MJ/m³ (2,360 Btu/ft³) nett*

To obtain the gas consumption at a different calorific value:

a. ***For l/s** - divide the gross heat input (kW) by the gross C.V. of the gas (MJ/m³)*
b. ***For ft³/h** - divide the gross heat input (Btu/h) by the gross C.V. of the gas (Btu/ft³)*
c. ***For m³/h** - multiply l/s by 3.6.*

Key to symbols

C_{13} C_{33} = A room sealed appliance designed for connection via ducts to a horizontal or vertical terminal, which admits fresh air to the burner and discharges the products of combustion to the outside through orifices which, in this case, are concentric. The fan is up stream of the combustion chamber.

I_{3P} = An appliance designed for use on 3rd Family gas, Group P only.

II_{2H3P} = Appliances capable of using gases of Group H and gases of Group P.

3.2 BOILER DIMENSIONS, SERVICES & CLEARANCES

The following minimum clearances must be maintained for operation and servicing.

Additional space will be required for installation, depending upon site conditions.

Side and Rear Flue

a. Provided that the flue hole is cut accurately, e.g. with a core boring tool or hole cutter the flue can be installed from inside the dwelling where wall thicknesses do not exceed 600mm. Where the space into which the boiler is going to be installed is less than the length of flue required the flue must be fitted from the outside.

Installation from inside ONLY

b. If a core boring tool or hole cutter is to be used inside the dwelling the space in which the boiler is to be installed must be at least wide enough to accommodate the tool.

In either of the above cases safe external access is required to allow the addition of sealant to seal around the flue to the aluminium flue collar (RSF 060).

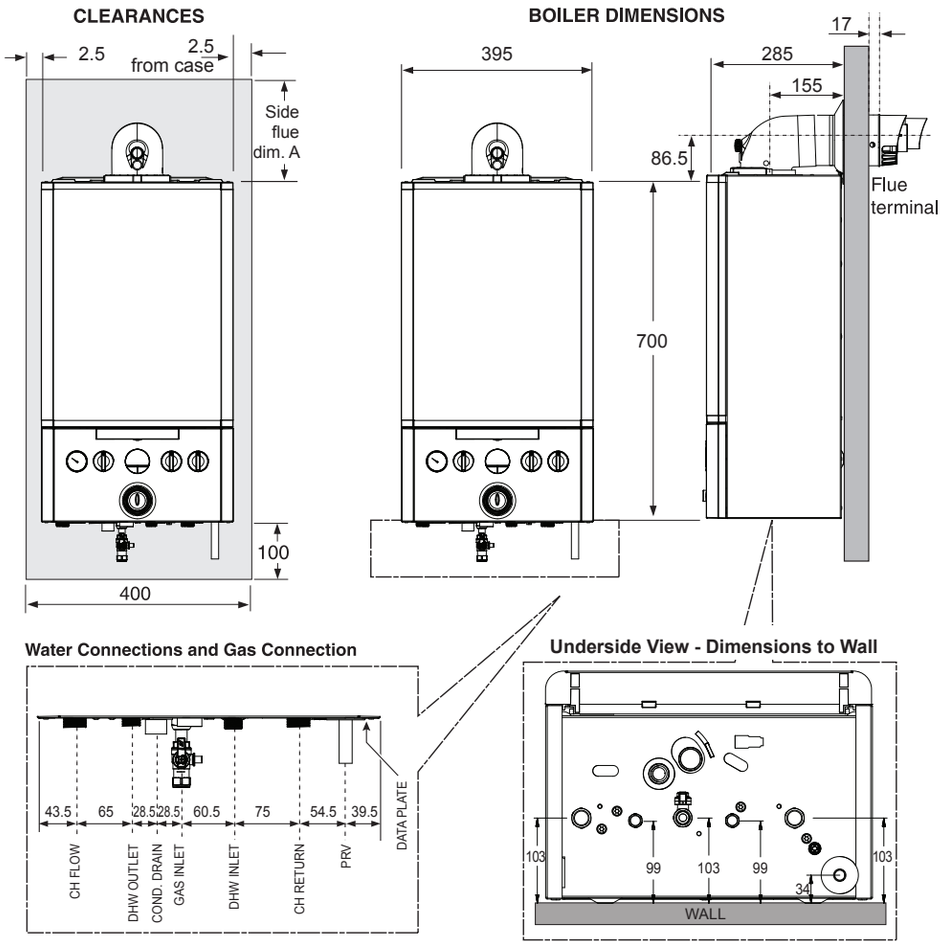

Front clearance
The minimum front clearance when built in to a cupboard is 5mm from the cupboard door but 450mm overall clearance is still required, with the cupboard door open, to allow for servicing.

* **Bottom clearance**
Bottom clearance after installation can be reduced to 5mm.
This must be obtained with an easily removable panel, to enable the consumer to provide the 100mm clearance required for servicing.

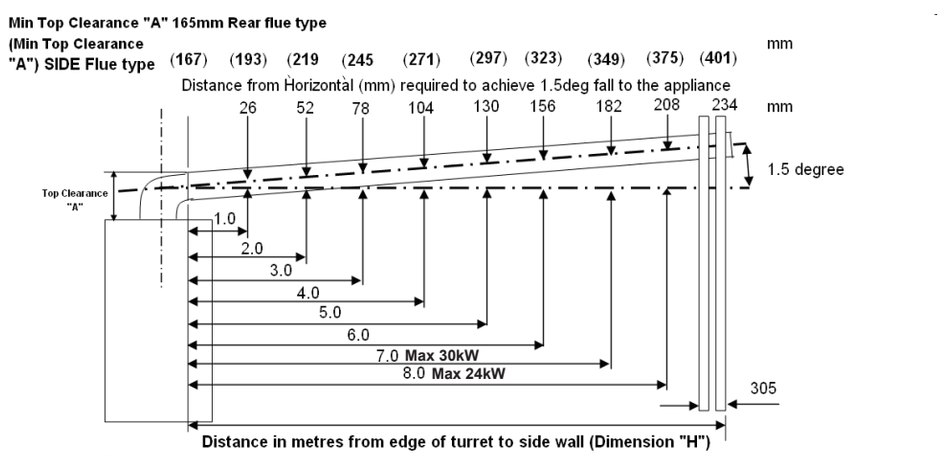

1. Dimension "H" must remain inside the Maximum flue length requirement for the designated output of the applaince been installed.
2. For flue lengths requiring extensions (RSF 341), the flue must incline by 26mm per 1 Metre of flue length.

No flue length greater that the maximum flue length shown above should be exceeded.

4 GENERAL INSTALLATION REQUIREMENTS

4.1 RECOMMENDATIONS

Current Gas Safety (Installation and Use) Regulation or Rules in Force.

The boiler is suitable only for installation in the specified countries and should be installed in accordance with the rules in force.

In GB, the installation must be carried out by a Gas Safe Registered Engineer, or in other countries a qualified and competent Gas Installer. It must be carried out in accordance with the relevant requirement of the:

- Gas Safety (Installation and Use) Regulations
- Appropriate National Standards
- The Water Fittings Regulations
- Current IEE Wiring Regulations
- Health & Safety Document Nol.635
- The Electricity at work Regulations 1989.
- BS5482 Part 2 Code of Practice for Domestic butane and propane gas burning installation in permanent dwellings, residential park homes and commercial premises.
- BSEN1949:2011 + A1 2013 Specification for the installation of Propane Systems for habitation purposes in leisure accommodation vehicles and other road vehicles.
- BS6891 Specification for the installation and maintenance of low pressure gas installation pipework of up to 35mm (R1¼) on premises

IMPORTANT: The manufacturer's notes MUST NOT be taken, in any way as overriding statutory obligations.

4.2 BOILER LOCATION

The boiler must be installed on a flat and vertical wall, capable of adequately supporting the weight of the boiler and any ancillary equipment.

The boiler may be fitted on a combustible wall and insulation between the wall and the boiler is not necessary unless required by National Standards.

For Electrical Safety reasons there must be no access available from the rear of the boiler.

The boiler must not be fitted outside.

BATHROOM INSTALLATIONS

This appliance is rated **IP20.**

The boiler may be installed in any room or internal space, although particular attention is drawn to the requirements of the current IEE (BS.7671) Wiring Regulations and the electrical provisions of the building regulations applicable in Scotland, with respect to the installation of the boiler in a room or internal space containing a bath or shower. For IE reference should be made to the current ETCI rules for electrical installations and I.S. 813:2002.

If the appliance is to be installed in a room containing a bath or shower then, providing water jets are not going to be used for cleaning purposes (as in communal baths/showers), the appliance must be installed beyond Zone 2, as detailed in BS.7671.

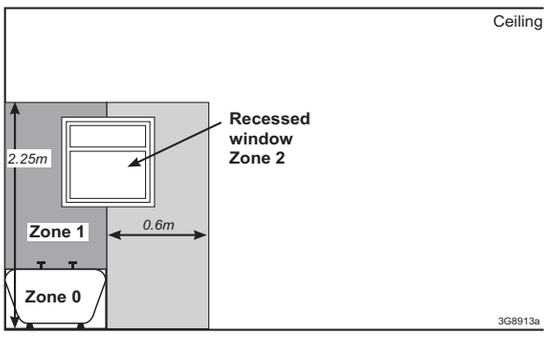

COMPARTMENT INSTALLATIONS

A compartment used to enclose the boiler should be designed and constructed specially for this purpose.

An existing cupboard or compartment may be used, provided that it is modified for the purpose.

Braces for compartments must be easily removable for service access.

- The position selected for installation MUST allow adequate space for servicing in front of the boiler.

4.3 FLUE TERMINAL POSITION

Pluming will occur at the terminal so avoid locations where this will cause a nuisance.

The boiler MUST be installed so that the terminal is exposed to external air.

It is important that the positions of the terminal allows the free passage of air across it at all times.

Minimum acceptable spacing from the terminal to obstructions and ventilation pump are specified in the table below.

For Caravan Holiday Homes; if the height of the flue terminal from any ground, decking or steps is under 1.5m then a suitable terminal guard should be fitted.

For Residential Park Homes, please refer to BS 5440 Part 1.

Table 4 - Balanced Flue Terminal Position

Flue Terminal Positions	Min Spacing*
Horizontal Terminals	
1. Directly below, above or alongside an opening window, air vent or other ventilation opening.	300mm (see diagram below)
2. Below Guttering, drain pipes or soil pipes.	*75mm* (25mm*)
3. Below eaves.	*200mm* (25mm*)
4. Below balconies or a car port roof.	*200mm* (25mm*)
5. From vertical drain pipes or soil pipes.	*200mm* (25mm*)
6. From an internal or external corner or to a boundary along side the terminal.	*300mm* (25mm*)
7. Above adjacent ground, roof or balcony level.	300mm
8. From a surface or a boundary facing the terminal.	600mm
9. From a terminal facing a terminal.	1,200mm
10. From an opening in a car port (e.g. door or window) into dwelling.	1,200mm
11. Vertically from a terminal on the same wall.	1,500mm
12. Horizontally from a terminal on the wall.	300mm
Vertical Terminals	
13. Above the roof pitch with roof slope of all angles, or above a flat roof.	300mm
14. From a single wall face, or from corner walls.	300mm
15. Below velux window.	2000mm
16. Above or side of velux window.	600mm

** Only one reduction down to 25mm is allowable per installation otherwise BS5440-1 2008 dimensions must be followed.*

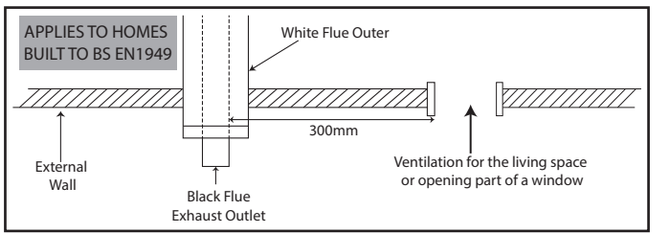

The 300mm distance should be measured as the shortest distance between the edge of the opening, and the inner exhaust tube, which is 20mm inside the white outer tube of the flue. This will result in the distance from the edge of the opening to the outer tube of the flue being 280mm minimum.

4.4 AIR SUPPLY

It is NOT necessary to have a purpose provided air vent in the room or internal space in which the boiler is installed. Neither is it necessary to ventilate a cupboard or compartment in which the boiler is installed, due to the low surface temperature of the boiler casing during operation.

4.5 ELECTRICAL SUPPLY

WARNING

This appliance MUST be earthed.

Wiring external to the boiler MUST be in accordance with the correct IEE Regulations and any local regulations.

The boiler has been pre-fitted with a 3 amp fused approved moulded 3 pin plug and flying lead, for use with 230V 50Hz. The plug should be used with an unswitched/shuttered socket outlet complying with BS1363.

4.6 GAS SUPPLY

A propane gas supply at 37mbar is required (30 mbar for DE).

Ensure that regulator is of sufficient capacity to carry the maximum boiler input plus the full demand for any other installed appliances.

Ensure the connection between supply/cylinder to caravan holiday home or park home is designed so that no pressure drop occurs.

Ensure the pipework is of sufficient size to prevent a pressure drop greater than 2.0mbar between the final pressure regulator to the caravan holiday home or park home and all appliances when the installation is subjected to the anticipated **maximum** load.

IMPORTANT

Ensure all gas valve connections are gas tight with a gas soundness check up to the gas control valve.

The complete installation MUST be tested for gas soundness.

4.7 CONDENSATE DRAIN

A condensate drain is provided on this boiler.

The drain MUST be connected to an approved drainage point.

All pipework and fittings MUST be made of plastic or purpose designed materials may be used.

Suitable protection against freezing should be undertaken.

4.8 WATER SYSTEMS - GENERAL

This boiler is designed for connections to fully pumped sealed system only.

IMPORTANT - A minimum length of 1 metre of copper pipe MUST be fitted to both central heating and DHW flow and return connections from the boiler before connection to any plastic piping.

Central Heating System

IMPORTANT - The sealed central heating system must be filled at all times with an antifreeze / inhibitor and water mix that is compatible with aluminium heat exchangers. The concentration levels of the antifreeze / inhibitor should be at least 25% in order to provide adequate corrosion protection. This level also provides protection against frost from -7.5ºC to -11ºC (depending on the product used). The maximum allowable level of antifreeze / inhibitor is around 40%, giving -22°C protection.

The only products approved are as follows:

- Fernox Alphi 11
- Sentinel X500

Failure to use these products may result in damage to the boiler and / or the radiators in the heating system.

4.9 REQUIREMENTS FOR SEALED WATER SYSTEMS

At maximum CH output 17.2kW (GB24) & 20.4(GB30) at a 20ºC differential and flow rate 12.3 l/min (GB24) & 14.6 l/min (GB30) a 3.4m wg head is available for the system

Set all radiators to give around 20ºC temperature differential.

The boiler does not normally need a bypass but at least some radiators of load at least 10% of the minimum boiler output. These radiators should be fitted with lock/wheelhead shield valves only.

A sealed system MUST only be filled by a competent person using an approved filling loop (or other approved method) between the mains water supply pipe and the central heating return pipe.

Once used, the filling loop should be disconnected and capped off.

4.10 EXPANSION VESSEL

The boiler is fitted with an 8 litre expansion vessel which is sufficient for a cold fill capacity of up to 143 litres.

For other system volumes refer to table below.

Safety valve setting	bar	3.0	
Vessel charge pressure	bar	0.5 to 0.75	
System pre-charge pressure	bar	None	1.0
System volume (litres)		**Expansion vessel volume (litres)**	
25		1.6	1.8
50		3.1	3.7
75		4.7	5.5
100		6.3	7.4
125		7.8	9.2
150		9.4	11.0
175		10.9	12.9
190		11.9	14.0
200		12.5	14.7
250		15.6	18.4
300		18.8	22.1
For other system volumes multiply by the factor across		0.063	0.074

4.11 PRESSURE RELIEF VALVE

A pressure relief valve set at 3 bar is fitted to the boiler. The connection is shown in the dimensions and connection details.

The discharge pipework must be suitable for use with 3bar water at 110ºC without damage to property and persons.

The run and exit point of the pipework should not leave a hazard or be prone to freezing up.

4.12 DHW SYSTEMS

Check that the mains supply pressure is within the units stated in the technical data section in this manual

A pressure reducing valve should be fitted if above 10 bar.

In areas of low mains water pressures the domestic hot water restrictor may be removed (by a suitably qualified person). The boiler will require the flow rate to be set to give a temperature of 35ºC at the tap furthest from the boiler.

In hard water areas where mains water exceeds 200ppm total hardness, the fitting of a scale reducing device is recommended (with the requirements of the local water company).

The use of artificially softened water, however, is not permitted.

The boilers are suitable for connection to most types of washing machine and dishwasher appliances.

5 INSTALLATION INSTRUCTIONS

5.1 BOILER PACKAGING

The boilers are supplied in different packagings:

- Boiler
- Flue System (separate)

5.2 FITTING/MOUNTING THE BOILER

Decide where the boiler is to be fixed on the wall, taking into account installation requirements detailed in previous section.

1. Screw the wall mounting plate to the wall choosing one of the two sets of slots in left and right bank. Ensuring that at least one of the screws is fitted into a top slot.

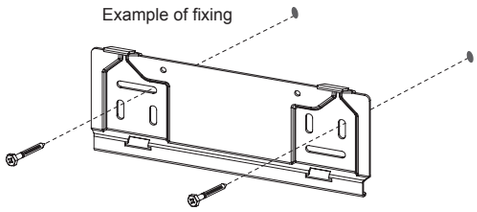

2. Lift the boiler onto the wall mounting plate, locating it over the two tabs.

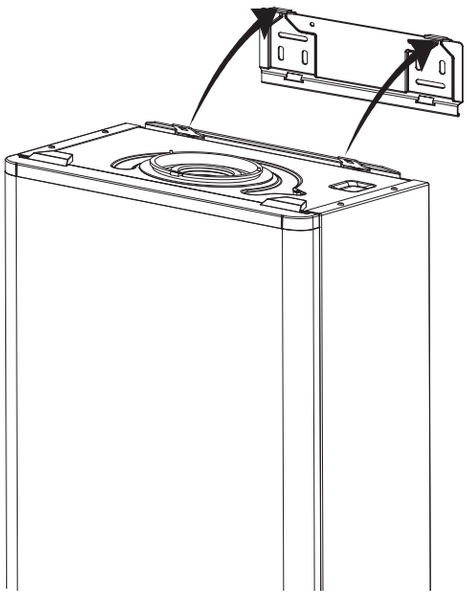

Note. If present, remove the bottom end support packaging and ensure all plastic plugs are removed from CH & DHW connections.

5.3 WIRING INSTRUCTIONS

WARNING: THIS APPLIANCE MUST BE EARTHED

Connections must be made in such a way that allows complete isolation of the electrical supply, e.g. double pole switch with 3mm contact separating in both poles.

5.4 INTERNAL WIRING

The boiler has been pre-fitted with a 3 amp fused approved moulded 3 pin and flying lead for use with 230V 50Hz.

If the supply cord is damaged, it must be replaced by the manufacturer, its service agent or similarly qualified persons in order to avoid a hazard.

The plug should be used with an unswitched/shuttered socket outlet complying with BS1363.

The boiler comes pre-fitted with a link wire between the room thermostat/ timer connections on the terminal strip. This creates a permanent call for heat and must be removed when adding a room thermostat.

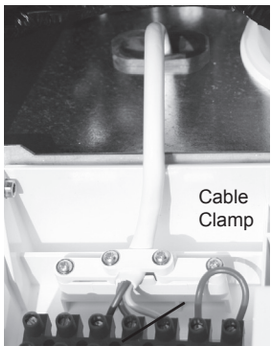

5.5 ROOM THERMOSTAT - WIRING

To fit a room thermostat proceed as follows:

1. Ensure that the electrical supply to the boiler is isolated **before** proceeding.
2. Remove the two screws beneath the flap on the front of the boiler and lower the front panel.
3. Remove the pre-fitted link wire between the Room stat/timer terminals.
4. Pass the cable through a grommet, secure with the cable clamp and connect the room stat as shown in the diagram below.
5. If room stat has a neutral connection, connect this to terminal N (load) in the fused spur.
6. Carry out all necessary electrical checks.
7. Raise the front panel and relocate the two screws under the small flap.
8. Check operation of room stat if possible.

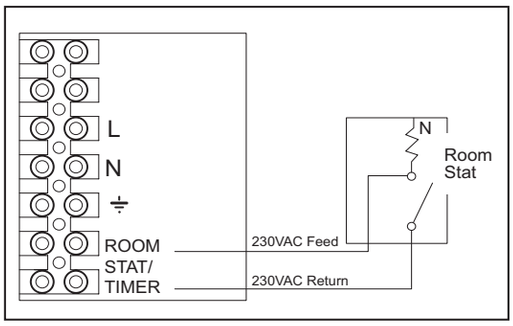

5.6 OPENTHERM WIRING

To fit an optional Opentherm Controller proceed as follows:

1. Ensure that the electrical supply to the boiler is isolated before proceeding.
2. Remove the screw beneath the flap on the front of the boiler, and lower the front panel.
3. Remove the pre-fitted link wire between the Opentherm terminals on the right hand side of the front panel.
4. Pass the two wires from the Opentherm controller through a grommet, and connect one to each if the two Opentherm terminals.
5. Raise the front panel and relocate the screw.
6. Check operation if possible.

5.7 WATER AND GAS CONNECTIONS

Ensure all boss blanking plugs are removed before making any connections.

Each valve must be fitted to the correct boss as shown in diagram below

Do not subject any of the isolating valves to heat as the seals may be damaged.

Ensure that the green fibre washer is used on the CH flow connection.

IMPORTANT - The gas service cock is sealed with a top hat washer - DO NOT subject to heat.

Pressure Relief Valve (PRV) - Located at the bottom right hand side of the boiler connection via a 15mm diameter stub pipe.

Use a replaceable connection to ease the replacement of the valve if required.

Ensure a safe discharge point using temperature and pressure resistant materials.

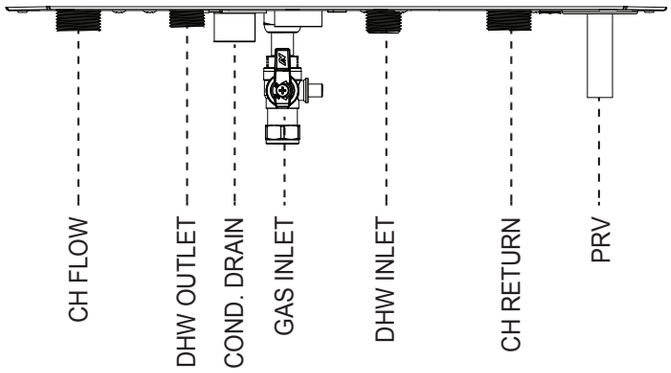

5.8 AIR / FLUE SYSTEMS

The flue system is part of the appliance and is approved as such. Only use the flue systems supplied by Morco.

The standard flue kit (RSF303) for the Morco GB range is a 600mm as shown below. There is also a 900mm kit available (RSF305).

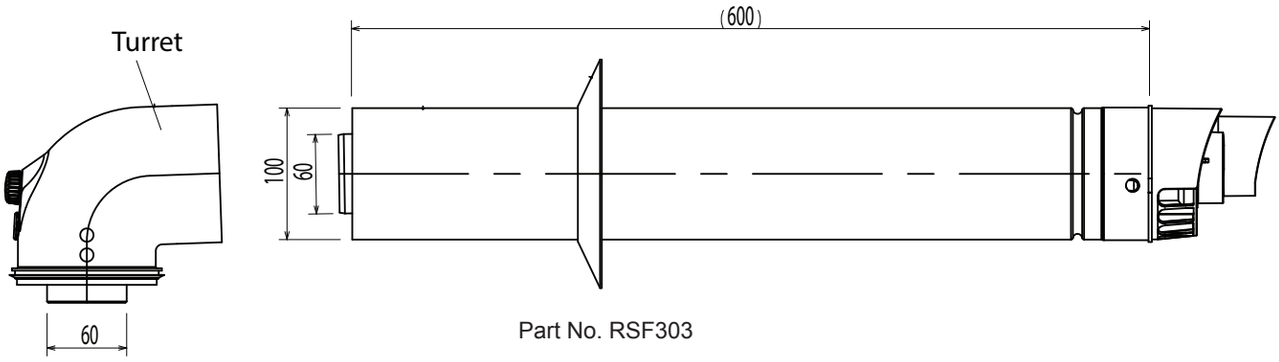

Part No. RSF303

The minimum cut length is 138mm (includes 30mm into elbow)

The maximum allowable length using extensions (RSF341) is:

GB24 *Series III* - 8m (minus any flue kit options)

GB30 *Series III* - 7m (minus any flue kit options)

5.9 DETERMINING THE FLUE LENGTH

IMPORTANT. The boiler must be installed in a vertical position in accordance to the installation instructions.

STANDARD FLUE KITS

Horizontal Flue Terminal RSF303 (600mm long) - contains: Flue turret, non telescopic single piece flue incorporating a terminal and inner rubber wall seal.

Extension Kit RSF341 - contains: 1 metre length of flue pipe (Functional length 950mm), 1 support bracket.

When extension kits are used the flue duct must incline 1.5 degrees away from the appliance, to allow the condensate to drain back to the boiler and out of the condensate drain. It is recommended that a support bracket is fitted on every 1 metre of pipe work used and the bracket is located as close to the collar as possible. The bracketing must ensure a 1.5 degree fall back to the appliance.

Only use water as a lubricant during assembly.

The horizontal flue kit terminal is classed as part of the maximum flue length.

Once the flue is installed it is IMPORTANT that the white air duct protrudes from the aluminium flue collar (RSF 060) by at least 17mm. The gap between the aluminium flue collar (RSF 060) and the white air duct MUST be sealed with sealant to create an adequate seal.

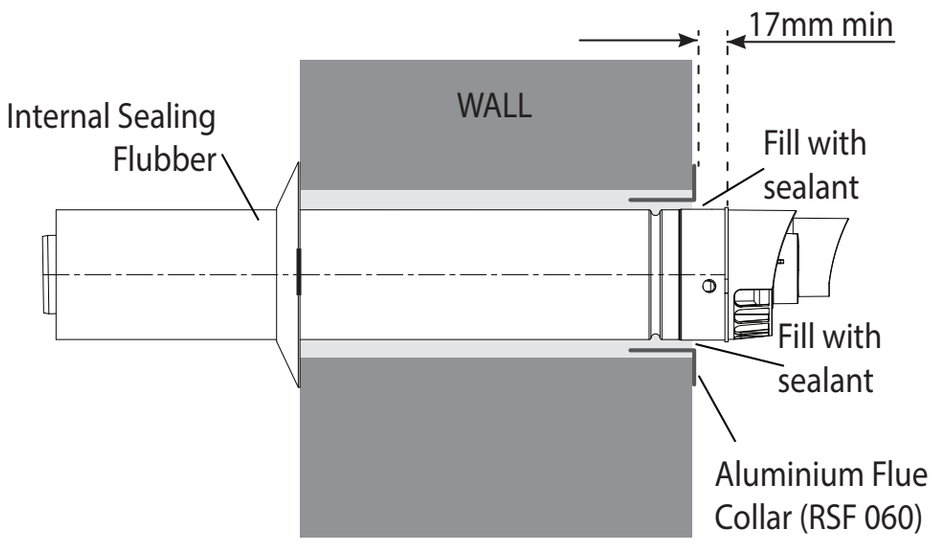

It is IMPORTANT that all attachments are fitted in accordance with the installation instructions provided in this manual.

The TURRET supplied in the Horizontal Flue Kits (RSF303 & RSF305) has an upper combustion sample point with a screw cap seal and a lower air sample point with an air stopper seal. Ensure all caps & seals are in place.

Additional Termination Kits available for use with these Horizontal Flue Kits (RSF303 & RSF305)

Flue Deflector Kit (RSF300)	The resistance is the equivalent of 1 metre of flue pipe and therefore must be deducted from any maximum flue length

Total Maximum Permissible Horizontal Concentric Flue Length combining both Horizontal Flue Kits and Extension Kits (Measured from centreline of the turret to the outside face of the aluminium flue collar (RSF060))

24 kW appliances	Total Maximum: 8 metres - minus any flue kit options
30 kW Appliances	Total Maximum: 7 metres - minus any flue kit options

Total Maximum Permissible Vertical Flue Length

24 & 30kW Appliances	Total Maximum: 7.5 Metres - minus any 90º bends

Minimum Horizontal Flue Lengths (Centre line of turret to outside face of the aluminium flue collar (RSF060))

Rear Flue - 191mm

Side Flue - 236mm (with minimum 2.5mm clearance)

5.10 DETERMINING THE FLUE LENGTH

FIGURE 1

REAR FLUE

Cut flue length = distance from edge of turret to outside of wall dimension A + 47mm.

***Note**. Minimum dimension A which can be accommodated is 91mm.*

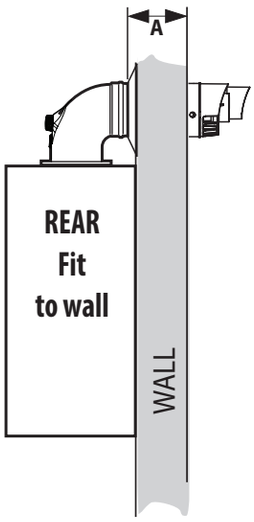

SIDE FLUE

Cut flue length = distance from edge of turret to outside of wall dimension B + 47mm.

***Note**. Minimum dimension B which can be accommodated is 136mm (with minimum clearance of 2.5mm).*

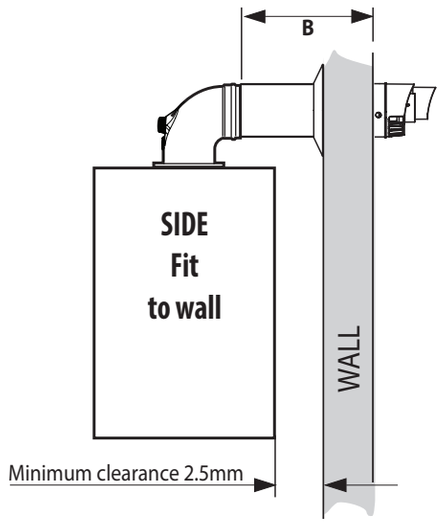

NOTES

Centre of turret to edge of turret = 100mm
Turret has a flue insertion of 30mm
The white outer flue tube must protrude the wall by 17mm.
From centreline of turret to wall. Rear mount 155mm, side (including clearance) 200mm

Flue length measured from outer terminal lip to end of outer flue

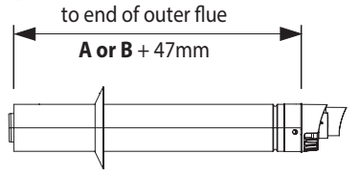

5.11 CUTTING HORIZONTAL FLUE TERMINAL RSF303 (600MM LONG)

1. Measure from the outer terminal lip to end of outer flue. Mark the required cut length (A or B + 47mm) around the circumference of the outer flue and cut following the mark to ensure its cut square.
2. Dress the cut end to make sure all burr's are removed and the cut edge is in its original shape.
3. Mark the inner tube 10mm longer than the outer tube around its circumference and cut following the mark to ensure its cut square.
4. Remove all burrs and place a light chamfer on the outer edge to aid assembly.

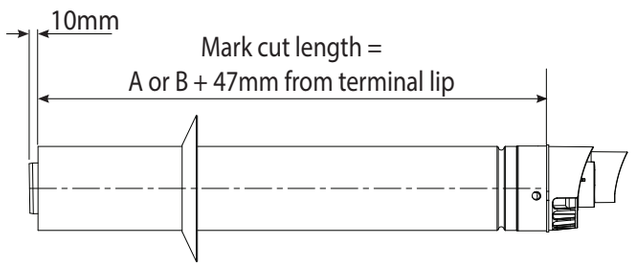

5.12 INSTALLING THE FLUE

FITTING FLUE THROUGH THE WALL

1. Ensure the seam and the outlet terminal are at the top and fitted as shown.
2. Once the flue is installed it is IMPORTANT that the white air duct protrudes from the aluminium flue collar (RSF 060) at least 17mm.

Note. If *less than 50% of the length of the flue is internal the flue should be fitted from outside.*

3. Fit the internal sealing flubber to the flue (leave loose) and check protrusion externally of the white air duct is 17mm.
4. Fit the turret as below

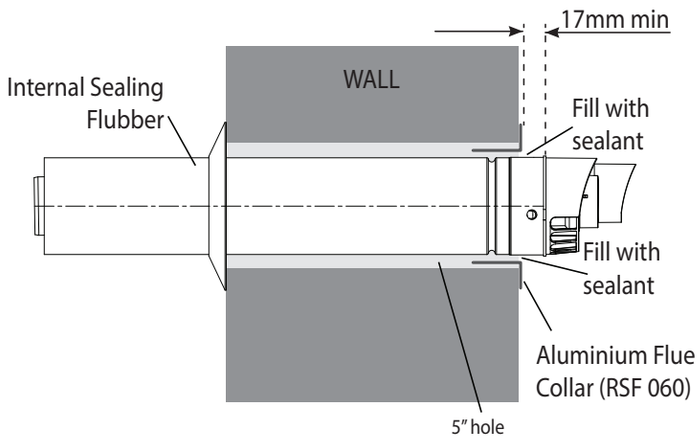

FITTING THE TURRET - Ensure the condensate trap / siphon is filled with water

1. Ensure the rubber seal is fitted correctly on the appliance manifold and that all flue seals are undamaged.
2. Hold the flue firmly and push the turret on until it has travelled 30mm on to the flue pipe and is fully engaged. Make sure the flue has not rotated or moved forward during fitting and the flue seam is upper most.
3. Push the turret into the manifold ensuring the upper plastic lip is flush with the top of the manifold.
4. Fully engage the clamp location section into the manifold location holes. Rotate down on to turret flange.
5. Secure clamp to appliance using securing screw.
6. Ensure all sample points are accessible and all sample plugs and caps are fitted.
7. Fully engage the flue into the turret and slide internal flubber to wall.
8. The gap between the aluminium flue collar (RSF 060) and the white air duct MUST be sealed with sealant to create a seal.

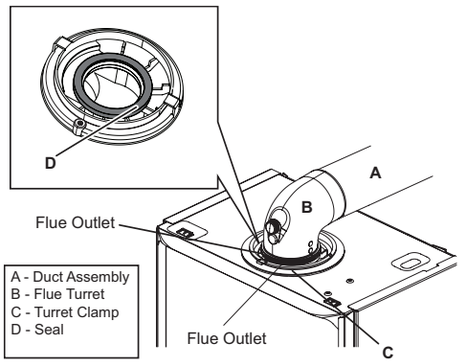

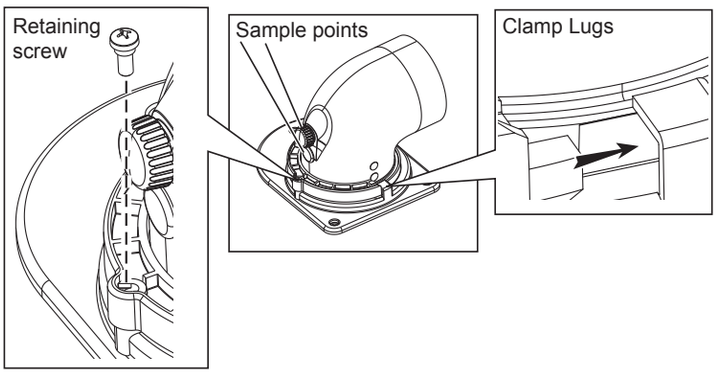

5.13 FLUE EXTENSIONS (RSF341) - OPTIONAL

For side outlet refer to section 5.9 before connecting.

INNER PIPE ASSEMBLY INSTRUCTIONS

1. Make sure that 'top hat' on the collar (A) fits over the rectangular form on the inner plastic pipe (B).

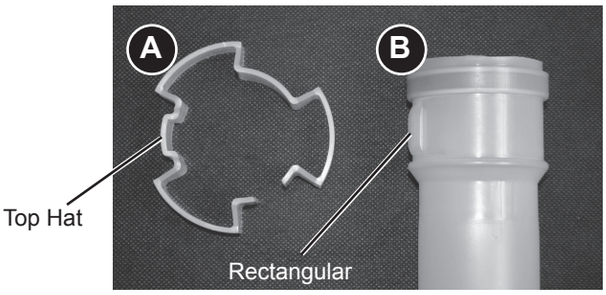

2. Ensure that the flat base of the collar (C) is positioned on the bottom lip of the pipe (D).

3. Slide the pipe and collar assembly back into the outer housing (E), note that this can only be done at the female end of the outer housing.

4. When fitting support brackets (F) make sure they are positioned on the female side of the neck as shown.

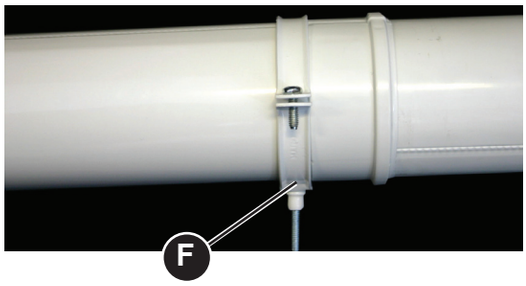

5.14 FLUE DEFLECTOR KIT (RSF300) - OPTIONAL

The flue deflector elbow can be fitted to the flue outlet of the standard terminal kits RSF303 or RSF305 to deflect the flue products horizontally to the left or the right only.

1. Refer to the boiler Installation and Servicing Instructions for fitting of the boiler and its flue system.

Note. *The resistance of the deflector is equivalent to 1 metre of flue length. Ensure this is used when calculating the maximum allowable flue length.*

2. Choose the direction required to deflect the flue products (horizontally left or right only).
3. Push the deflector elbow onto the angled flue outlet of the terminal in the desired position and ensure the deflector is pushed up to the shoulder to fully engage the rubber seal. Drill the terminal through the hole in the deflector with a 3.2mm (1/8") drill and secure the deflector with the self tapping screw provided.

Note. *Only use water as a lubricant during assembly. Do not use mineral based oils.*

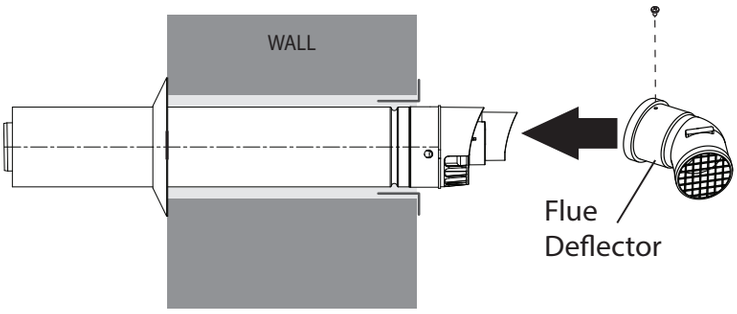

5.15 90º KIT RSF315 (OPTIONAL)

This optional kit can be used on both horizontal and vertical flue kits

1. Use dimensions below for calculating total length
2. When cutting extensions or flue kits always allow sufficient (+ 30mm air duct + 14mm flue duct) to allow for correct engagement in the fitting
3. 1 elbow reduces the maximum available length by 1m

Note. *Only use water as a lubricant during assembly . Do not use mineral based oils.*

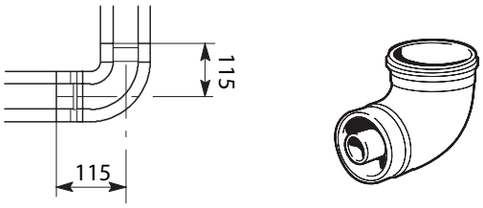

5.16 FITTING THE OPTIONAL ROOF FLUE KIT (RSF345) (Pitched)

Note.
A 5º or 14º pitched roof plate (not supplied) is required before proceeding with the installation of this kit.

This kit is suitable for both 5º and 14º pitched roof terminations, using a concentric flue to run vertically from the top of the boiler and terminating above roof level.

Connection to the top of the boiler is made using a vertical connector (supplied in the kit - RSF346).

WEATHER PROOFING

Where the flue passes through the roof line an adequate seal must be made. This is achieved by using a suitable sealant.

ACCESSORIES

Flue Duct Extension Kits are available for flue lengths extending beyond 1m. These packs contain 1m extension ducts and may be cut to the desired length. If 90º elbows are used (RSF315) they will reduce the overall height by 1m per elbow.

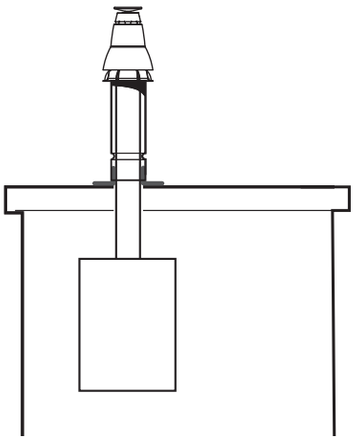

Terminal Position	Minimum Dimension
Directly below an opening, air brick, windows, etc.	300 mm
Below plastic / painted gutters	300 mm
Painted surface	300 mm
Below eaves or balcony	500 mm
Below velux windows	2000mm
Above or side of velux windows	600mm

5.17 ASSEMBLING THE ROOF FLUE KIT

1. Position the roof plate (supplied separately) over the hole cut in the roof and insert flue terminal from the roof end.

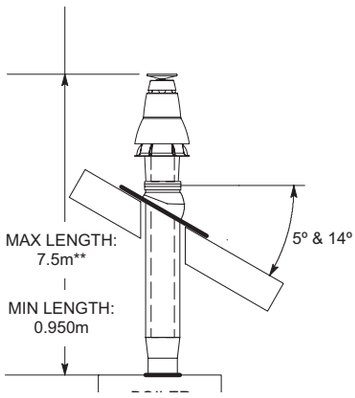

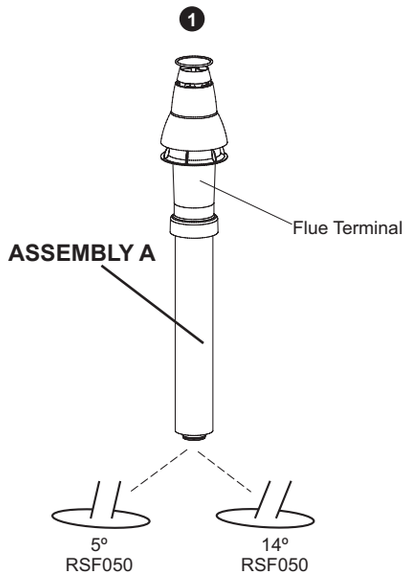

2. Ensure that if the length needs to be adjusted to allow an additional 30mm added to the outer air tube length 14mm added to the inner flue length. This allows correct engagement into the vertical connector.

   Note. Ensure a square cut. Remove all burrs and sharp edges.
3. Fit the vertical connector (supplied in the kit) and secure the vertical connector by applying downward pressure on the connector.
4. Position the clamp on the top face of the flue manifold and push it horizontally backwards. Locate both clamp lugs into the flue manifold and secure to the flue manifold clamp with the M5 retaining screw.
5. “Push” assembly A into vertical connector.

Notes. *Ensure turret sample points are serviceable and all caps and plugs are fitted.*
Ensure condensate siphon/trap is filled with water.

6. Finally ensure the roof plate is correctly sealed to the roof.

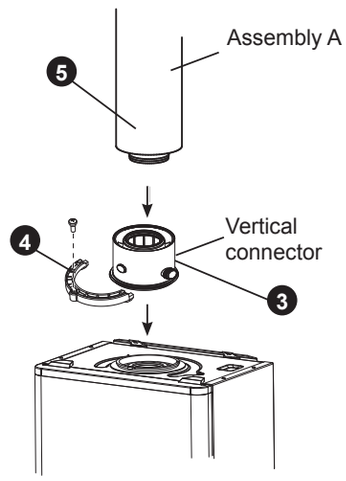

5.18 CONDENSATE DRAIN

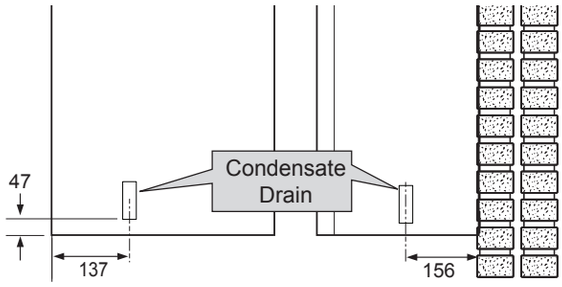

This appliance is fitted with a siphonic 75mm sealed condensate trap system that requires filling before operating the appliance for the 1st time or after maintenance.

All condensate pipework should conform to the following:

a. Where a new or replacement boiler is being installed, access to an internal 'gravity discharge' termination should be one of the main factors considered in determining boiler location.
b. Plastic with push fit or solvent connections.
c. Internal plastic pipe work a minimum of 19mm ID (typically 22mm OD)
d. External plastic pipe must be a minimum of 30mm ID (typically 32 OD) before it passes through the sleeved wall.
e. All horizontal pipe runs, must fall a minimum of 45mm per metre away from the Boiler.
f. External & unheated pipe work should be kept to a minimum and insulated with Class "O" waterproof pipe insulation.
g. All installations must be carried out in accordance to the relevant connection methods as shown in the "Condensate installation diagrams" & BS6798:2009
h. Pipe work must be installed so that it does not allow spillage into the dwelling in the event of a blockage (through freezing)
i. All internal burrs should be removed from the pipe work and any fittings.

NB. Clip runs to prevent pipework disconnecting due to vibration etc.

In order to minimise the risk of freezing during prolonged very cold spells, one of the following methods of terminating condensate drainage pipe should be adopted.

Internal Drain Connections

Wherever possible, the condensate drainage pipe should be routed to drain by gravity to a suitable internal foul water discharge point such as an internal soil and vent stack or kitchen or bathroom waste pipe etc. See Figs 1 and 2.

Condensate Pump

Where gravity discharge to an internal termination is not physically possible or where very long internal pipe runs would be required to reach a suitable discharge point, a condensate pump of a specification recommended by the boiler or pump manufacturer should be used terminating into a suitable internal foul water discharge point such as an internal soil and vent stack or internal kitchen or bathroom waste pipe etc. (fig 3).

External Drain Connections

The use of an externally run condensate drainage pipe should only be considered after exhausting all internal termination options as described previously. An external system must terminate at a suitable foul water discharge point or purpose designed soak away. If an external system is chosen then the following measures must be adopted:

The external pipe run should be kept to a minimum using the most direct and "most vertical" route possible to the discharge point, with no horizontal sections in which condensate might collect.

- For connections to an external soil/vent stack see Fig 4. Insulation measures as described should be used.
- When a rainwater downpipe is used, an air break must be installed between the condensate drainage pipe and the downpipe to avoid reverse flow of rainwater into the boiler should the downpipe become flooded or frozen, see Fig 5.
- Where the condensate drain pipe terminates in a purpose designed soakaway (see BS 6798) any above ground condensate drain pipe sections should be run and insulated as described above. See Fig 6.
- Where the condensate drain pipe terminates over an open foul drain or gully, the pipe should terminate below the grating level, but above water level, to minimise "wind chill" at the open end. The use of a drain cover (as used to prevent blockage by leaves) may offer further prevention from wind chill.

Unheated Internal Areas

Internal condensate drain pipes run in unheated areas should be treated as external pipe.

Ensure the customer is aware of the effects created by a frozen condensate and is shown where this information can be found in the user manual.

Figure 1 - Connection of Condensate Drainage Pipe to Internal Soil & Vent Stack

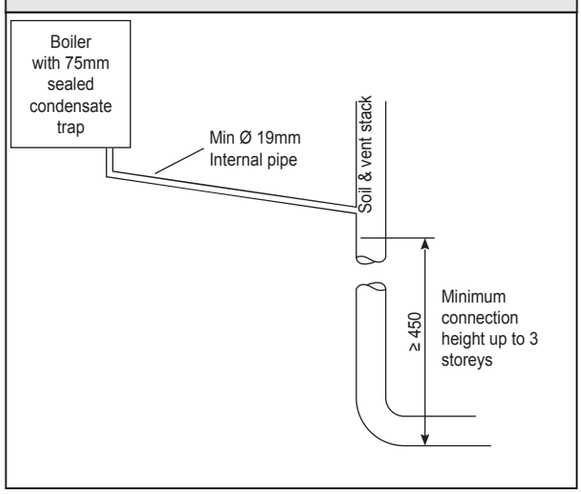

Figure 2 - Connection of a Condensate Drainage Pipe Downstream of a Sink, Basin, Bath or Shower Water Trap to Internal Soil Vent Stack

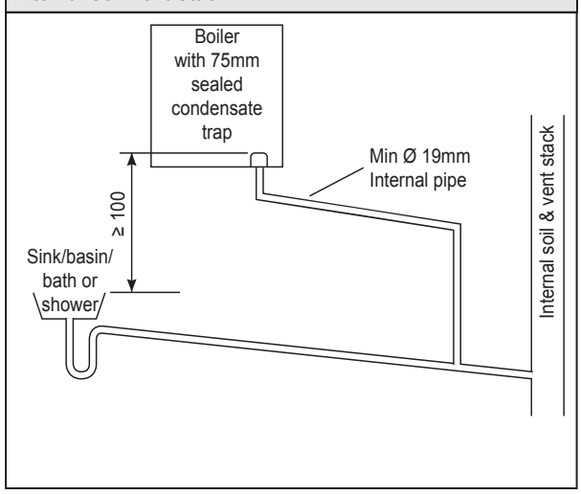

continued . . . . .

CONDENSATE DRAIN - CONT'D.....

Figure 3 - Connection of a Condensate Pump Typical Method (see manufacturers detailed instructions)

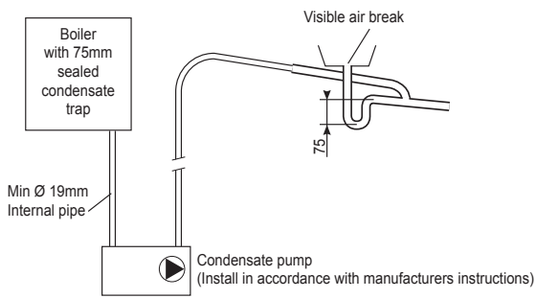

Figure 4 - Connection of Condensate Drainage Pipe to External Soil & Vent Stack

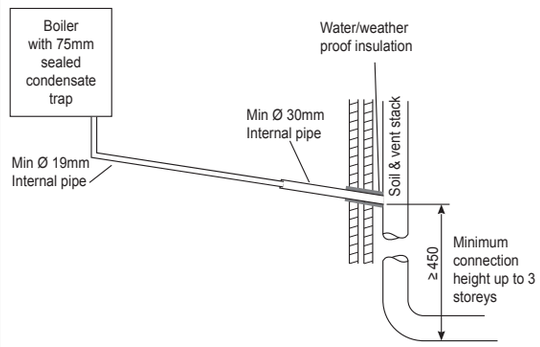

Figure 5 - Connection of a Condensate Drainage Pipe to an External Rainwater Downpipe (only combined foul/rainwater drain)

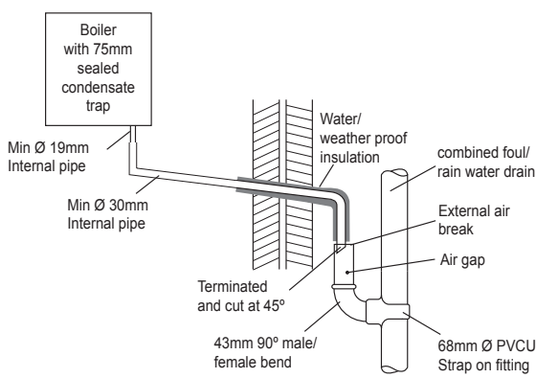

Figure 6 - Connection of a Condensate Drainage Pipe to an External Purpose Made Soak Away.

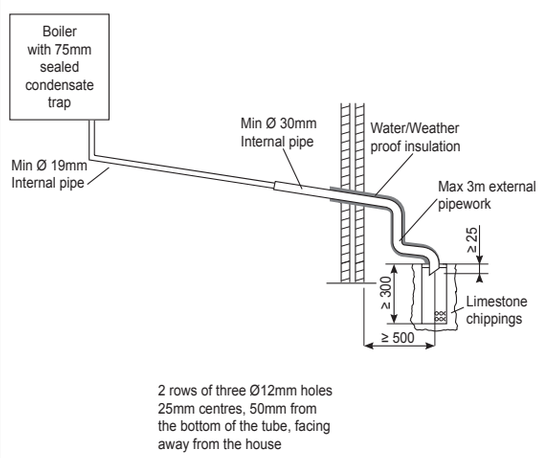

6 COMMISSIONING INSTRUCTIONS

Before commissioning the boiler, the whole gas installation including the meter (if fitted) MUST be purged and tested for gas soundness.

Purge air from the gas installation by the approved methods only.

WARNING. Whilst effecting the required gas soundness test and purging air from the gas installation, open all windows and doors, extinguish naked lights and DO NOT smoke.

Ensure that the flue has been installed correctly and no vents are blocked. Before commencing commissioning, ensure that the CH system and DHW and cold water system have been flushed. The CH system needs to be treated with water treatments that are approved for use with aluminium alloy heat exchangers.

6.1 GENERAL

Please Note: The combustion for this appliance has been checked, adjusted and preset at the factory for operation on the gas type defined on the appliance data plate. As part of the commissioning process, the combustion of this appliance must be checked. A flowchart to assist is provided on page 40.

DO NOT adjust the air/gas ratio valve.

Having checked:

- That the boiler has been installed in accordance with these instructions.
- The integrity of the flue system and the flue seals, as described in the Flue Installation section.

Proceed to put the boiler into operation as follows:

CHECK THE OPERATIONAL (WORKING) GAS INLET PRESSURE

Set up the boiler to operate at maximum rate by opening hot tap to maximum flow.

With the boiler operating in the maximum rate condition check that the operational (working) gas pressure at the inlet gas pressure test point complies with the requirements - refer to “Gas Supply” on page 15.

Ensure that this inlet pressure can be obtained with all other gas appliances in the property working at maximum.

6.2 DOMESTIC HOT WATER

Turn on the main cold water supply.

Fill and vent the installation by turning on and off the various hot water taps in the installation.

Check hot water taps in the installation.

Check for and repair leaks as necessary.

6.3 CENTRAL HEATING CIRCUIT

Fill the siphon in the condense pipework prior to operating.

In order for the boiler to function correctly, the pressure in the central heating circuit must be between 1 and 1.5 bar on the pressure gauge.

Both the boiler and central heating installation must be purged of any air. The boiler has an auto air vent integral to the pump which must be loose prior to commissioning.

Add an approved flushing solution to one of the radiators.

Fill the central heating circuit using one of the approved methods to 1 bar.

Open radiator vent screws and turn off when water appears.

Turn off the filling method and disconnect.

With the system hot, examine all water connections. The system pressure should not exceed 2.5 bar.

Turn off gas, water and electricity when draining down.

Refill and vent the system, add inhibitor and anti-freeze in the required concentration and check for water leaks.

Check that the condensate operates and the pipework for any leaks.

6.4 INITIAL OPERATION

Ensure central heating circuit is full and vented, and pressure gauge is reading 1.0 bar.

6.5 DOMESTIC HOT WATER MODE

Turn the “mode” control knob to tap icon.

Display alternates between “dH” and the current temperature. The “Burner on” indicator will illuminate when the burner is lit.

Check the DHW functions by turning on a hot water tap.

Close the DHW tap.

Display will read “00”.

Legend

A. Domestic Hot Water Temperature Knob
B. Central Heating Temperature Knob
C. Mode Knob
D. Boiler Status Display
E. Function Button
F. Burner ‘on’ Indicator
G. Restart Button
H. Central Heating Economy Setting
J. Pressure Gauge
K. Timer

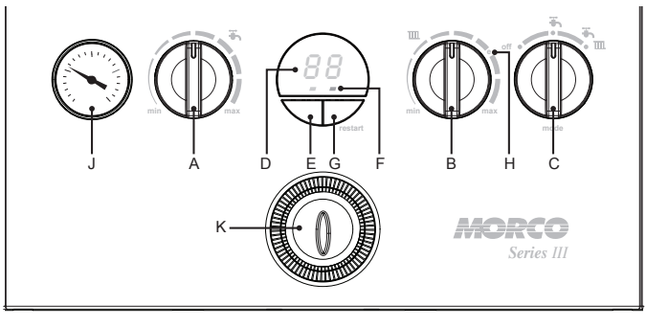

THE DISPLAY

The user control has two LEDs and two 7 segment displays to inform the user about the status. The display will show the status of the boiler. The LED will show the status of the flame. If no flame is detected the LED is off. When the flame is detected the LED will be lit permanently.

Below is a list with display function in normal operation.

00 Standby, no demand for heat present.

CH Boiler is active for central heating.

dH Boiler is active for domestic hot water.

F CH circuit water less than 5ºC.

Below is a list with display in fault condition. If the display is showing “L” or “F” with a number / letter refer to page 34.

L Boiler is in lockout for a specific error. Display will show “L” with a number or letter to show which error is detected.

F Boiler has a fault for a specific error. Display will show “F” with a number or letter to show which error is detected.

Service Modes

SH Service High

SL Service Low

6.6 FINAL CHECKS

Re-light and test for gas soundness.

Set the CH and DHW temperature knobs to the desired settings.

Ensure that the integral timer and/or room thermostat are set to the required settings.

6.7 HANDING OVER

After completing the installation and commissioning of the system the installer should:

- Hand the Users Instruction to the owner and emphasise their responsibilities under the relevant national regulations.
- Explain and demonstrate the lighting and shut down procedures.
- Explain the operation of the boiler and the use and adjustment of the system controls to ensure the greatest possible fuel economy, consistent with the owners heating and hot water requirements.
- Advise the user of the precautions necessary to prevent damage to the system and to the building in the event of the system remaining in operation during frosty condition.
- Explain the function of the boiler fault mode. Emphasise that if a fault is indicated, refer to Fault Codes in the User Guide.
- Explain and demonstrate system controls, integral timer functions and boiler restart procedure.

IMPORTANT - Stress the importance of an annual service by a competent gas registered engineer.

7 SERVICING SCHEDULE

For the very latest copy of literature for specification, maintenance practices and parts replacement, visit our website www.morcoproducts.co.uk where you will be able to download the relevant information.

WARNING. **Always turn OFF the gas supply at the gas service cock, and switch OFF and disconnect the electricity supply to the appliance before servicing.**

Combustion testing must be carried out by a competent person using a combustion analyser conforming to BS7927.

To ensure the continued safe and efficient operation of the appliance it is recommended that it is checked at regular intervals and serviced as necessary. The frequency of servicing will depend upon the installation condition and usage but should be carried out at least annually.

It is the law that any service work must be carried out by a Gas Safe Registered Engineer, or in other countries a qualified and competent Gas Installer.

7.1 INSPECTION

1. Light the boiler and carry out a pre-service check, noting any operational faults.
2. Check the flue terminal (and terminal guard if fitted) is undamaged and clear of any obstruction.
3. Check all water and gas joints for signs of leakage. Remake any suspect joints ensuring a gas tightness check is carried out if applicable and the water system is correctly refilled, vented and re-pressurised.

7.2 CLEANING PROCEDURE

Note. In order to carry out either servicing or replacement of components the boiler upper and lower front panels must be removed. Refer to Section 7.5.

1. Clean the main burner. Refer to Section 7.7.
2. Clean the heat exchanger & condensate trap/siphon. Refer to Sections 7.8 & 7.9.
3. Check the main injector for blockage or damage. Refer to Section 7.3.
4. Check that the flue terminal is unobstructed and that the flue system is sealed correctly.

The cleaning procedures are covered more fully in Sections 7.5-7.9 and MUST be carried out in sequence.

IMPORTANT.

5. After completing the servicing or exchange of components always ensure all gas valve connections are gas tight with a gas soundness check up to the gas control valve.
6. When work is complete the front panels MUST be correctly refitted, ensuring that a good seal is made.

Do NOT OPERATE the boiler if the upper front panel is not fitted.

7. If, for any reason, the condensate trap/siphon has been removed ensure the trap is refilled with water before reassembling.
8. Check the gas consumption if on metered installations.
9. Check combustion by connecting the flue gas analyser to the flue gas sampling point as shown in the diagram and measure CO & CO_2. (Refer to Section 9).

   If the CO/CO_2 ratio is greater than 0.004 AND the integrity of the complete flue system and combustion circuit seals have been verified and the inlet gas pressure have been verified, then contact Morco.

7.3 GENERAL

Please Note: During routine servicing, and after any maintenance or change of part of the combustion circuit, the following must be checked:

- The integrity of the flue system and the flue seals,
- The integrity of the boiler combustion circuit and the relevant seals
- The operational (working) gas inlet pressure at maximum rate. Turn on one or more DHW taps.
- The combustion performance.

7.4 COMPETENCE TO CARRY OUT THE CHECK OF COMBUSTION PERFORMANCE

Please Note: BS 6798:2009 Specification for installation and maintenance of gas-fired boilers of rated input not exceeding 70kW net advises that:

- The person carrying out a combustion measurement should have been assessed as competent in the use of a flue gas analyser and the interpretation of the results.
- The flue gas analyser used should be one meeting the requirements of BS7927 or BS-EN50379-3 and be calibrated in accordance with the analyser manufacturers requirements.

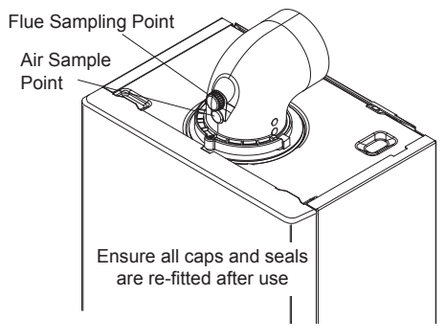

7.5 BOILER UPPER & LOWER FRONT PANEL REMOVAL / REPLACEMENT

REMOVAL

1. Lift the lower front panel access flap.
2. Unscrew the fixing screw, close the access flap to retain the screw and hinge the lower front panel down into the service position.
3. Remove the two upper front panel fixing screws, lift the panel and remove.

REPLACEMENT

4. Hook the upper panel onto the top retaining clips.
5. Retain the upper panel with the two fixing screws previously removed ensuring a good seal is made.
6. Swing the lower front panel up and retain with the fixing screw.
7. Close the lower front panel access flap.

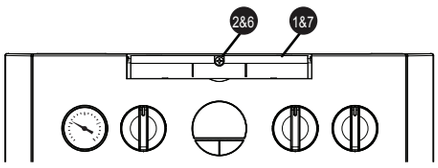

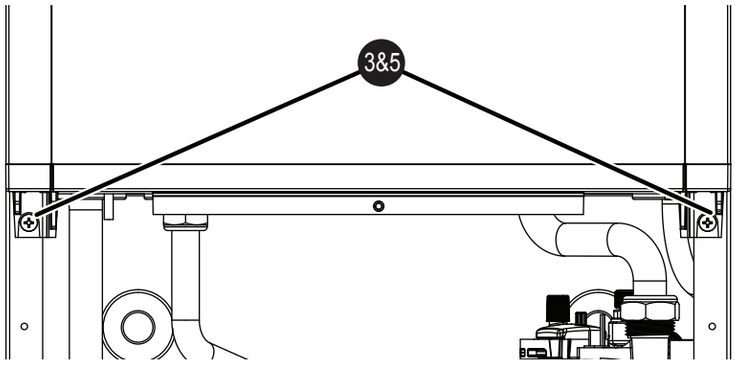

7.6 FAN AND VENTURI ASSEMBLY REMOVAL AND CLEANING

1. Disconnect the electrical leads from the fan.
2. Remove the clip from the gas control valve outlet and ease the pipe upwards rotate and then ease down to remove.
3. Remove the extended nut on the fan mounting bracket.
4. Lift off fan and venturi assembly.
5. Inspect the injector for blockage or damage.
6. Inspect fan outlet sealing gasket and replace if necessary.

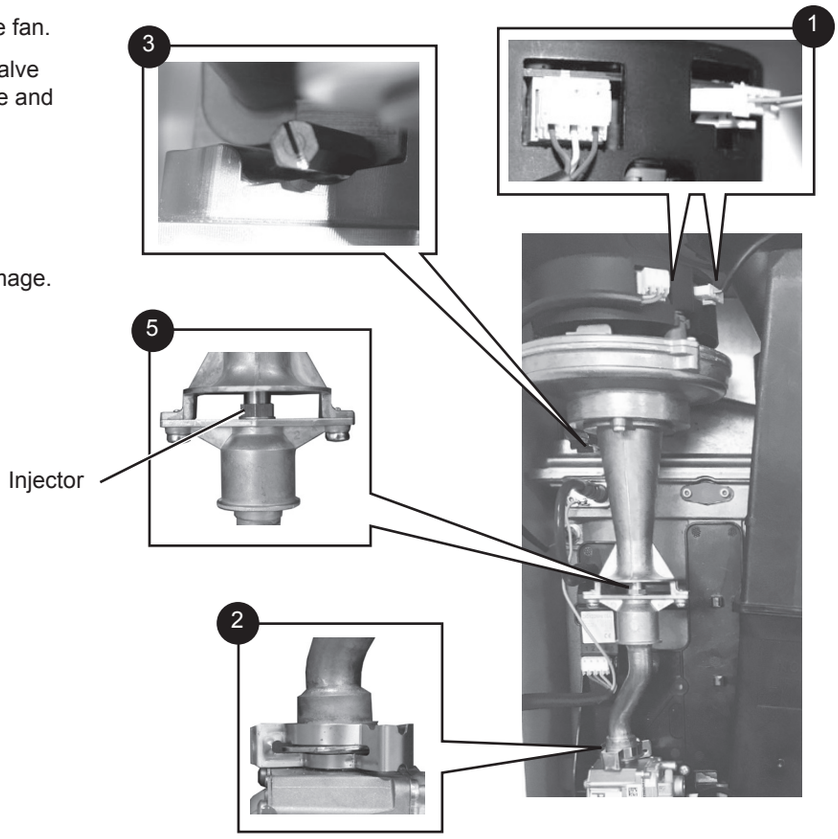

7.7 BURNER REMOVAL AND CLEANING

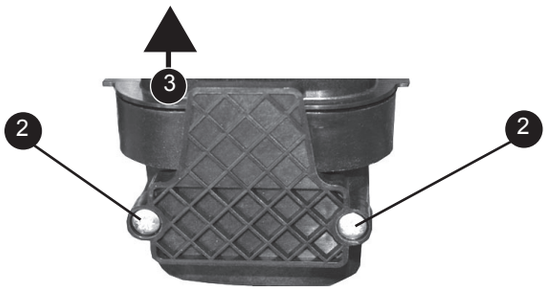

1. Ensure the sump is fully drained
2. Undo the two screws and remove the sump cover retaining the lower flue manifold.
3. Lift the manifold to clear the bottom sealing gasket and remove manifold.
4. Remove the 2 burner front fixing screws and loosen the 2 rear extended nuts by at least ten turns.
5. Lift off the burner from the combustion chamber. To facilitate the removal angle the burner as shown.

IMPORTANT

The burner head is a ceramic plaque construction. Care must be taken to ensure that **the burner is not placed down upon its face** as this may cause damage to the ceramic.

6. Brush off any deposits that may be on the ceramic with a SOFT brush.
7. Inspect the sealing gasket around the burner for any signs of damage. Replace as necessary.

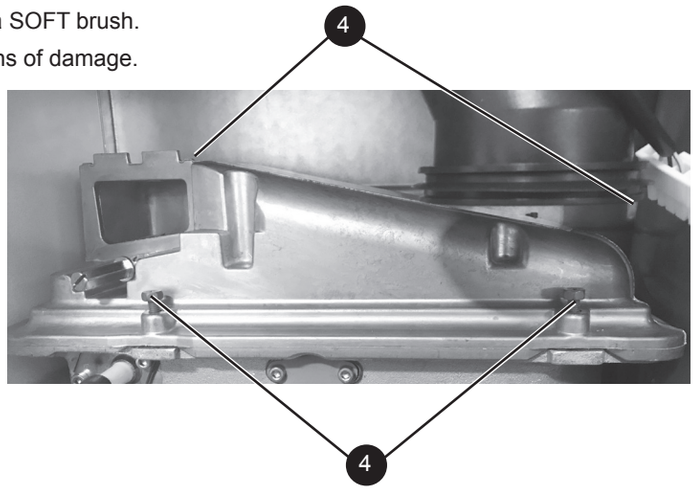

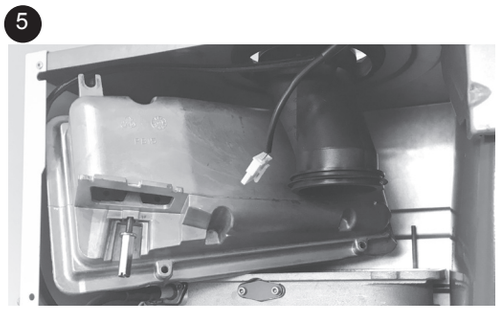

7.8 CLEANING THE CONDENSATE TRAP/SIPHON

Note: *Ensure condensate trap is fully drained before removal.*

1. Pull off the rubber pipe at the siphon.
2. Turn the siphon clockwise to disengage and lift to remove.
3. Flush out all deposits with clean water.
4. Reassemble in reverse order

Note. *When reassembling ensure the trap is full of water*

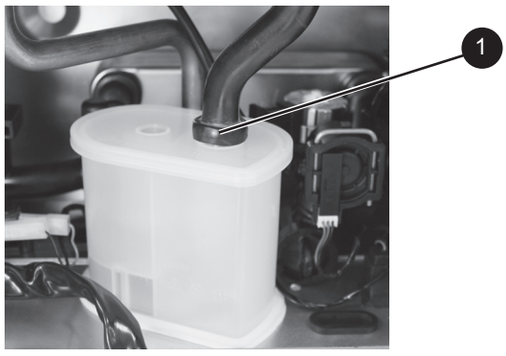

7.9 CLEANING THE HEAT EXCHANGER

Note: **Ensure the condensate trap/siphon is fully drained before cleaning.** Refer to Sections 7.8.

1. Remove ignition/flame detection electrode. Refer to Section 7.10.
2. It is advisable to replace the sump cover prior to the water flush process.
3. Thoroughly flush the heat exchanger by pouring water into the top of the combustion chamber ensuring the full top area is covered.
4. Remove the sump cover and clean loose deposits from the sump.
5. Inspect the ignition/flame detection electrode. Ensure that it is clean and in good condition - replace if necessary.
6. Re-fit the ignition/flame detection electrode. Ensure that earth wire is connected to the electrode.
7. Check that the ignition gap is correct. Refer to Section 7.9.

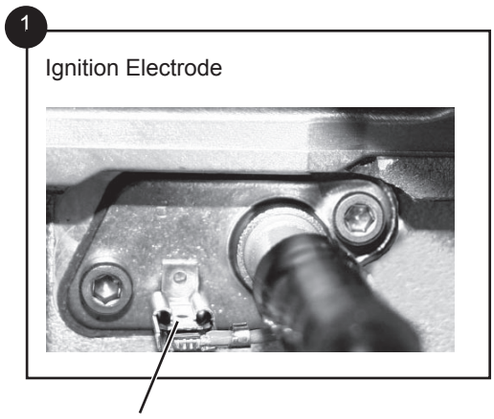

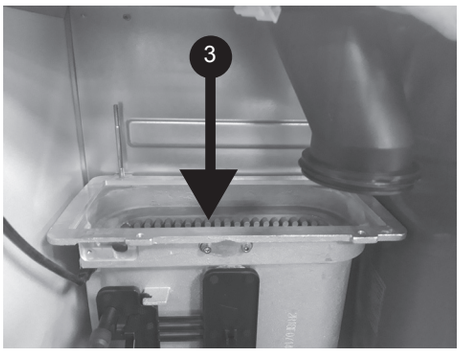

7.10 IGNITION / FLAME DETECTION ELECTRODE

1. Remove the burner. Refer to Section 7.7.
2. Check dimensions are correct as in diagram below.
3. Reassemble in reverse order.

FOR REMOVAL:

1. Unplug the ignition/flame detection lead from the electrode.
2. Remove the earth lead from the ignition electrode
3. Remove the 2 screws holding the ignition electrode to the combustion chamber.
4. Remove the electrode.
5. Fit the new electrode, using the new gasket supplied. Check dimensions as shown.
6. Reassemble in reverse order.
7. Check the operation of the boiler.

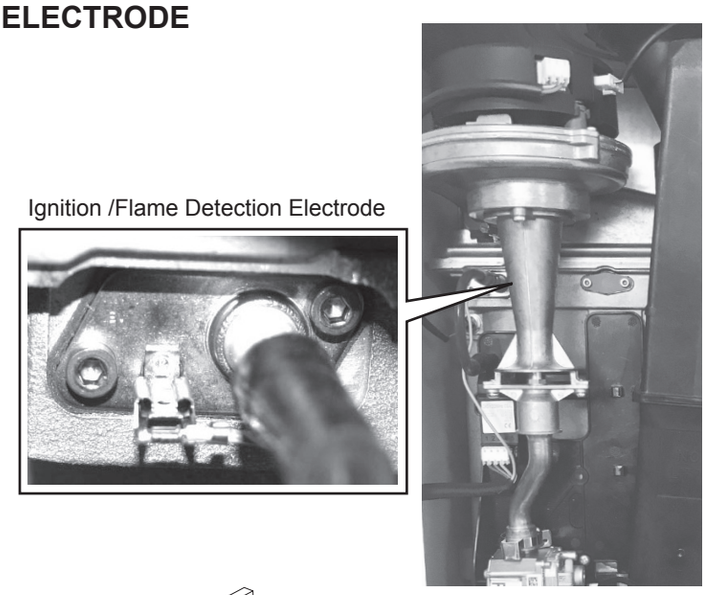

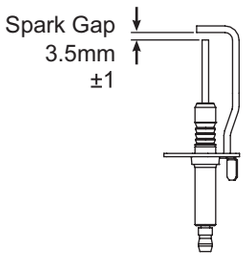

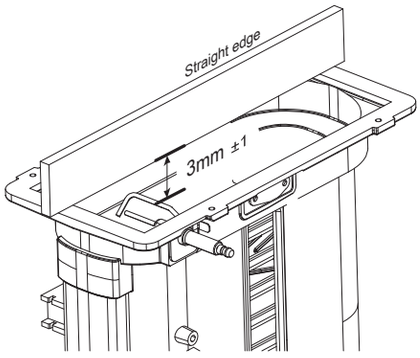

7.11 REASSEMBLY

Reassemble the boiler in the following order:

1. Ensure that the condensate trap/siphon is full of water.
2. Refit the burner ensuring the sealing gasket is correctly positioned and free from damage (tighten the 4 fixing screws in the sequence A,B,C,D, shown below).
3. Refit the fan / venturi assembly ensuring the retaining tabs are correctly positioned and the sealing gasket is correctly positioned and free from damage.
4. Reconnect the fan electrical leads.
5. Remove the sump cover and refit the lower flue manifold as shown.
6. Refit the sump cover.
7. Refit the boiler upper and lower front panels.

   IMPORTANT. Ensure that the boiler upper front panel is correctly fitted and that a good seal is made. Replace seals as necessary.
8. Turn on the gas supply at the gas service cock.
9. Reconnect the electrical supply.

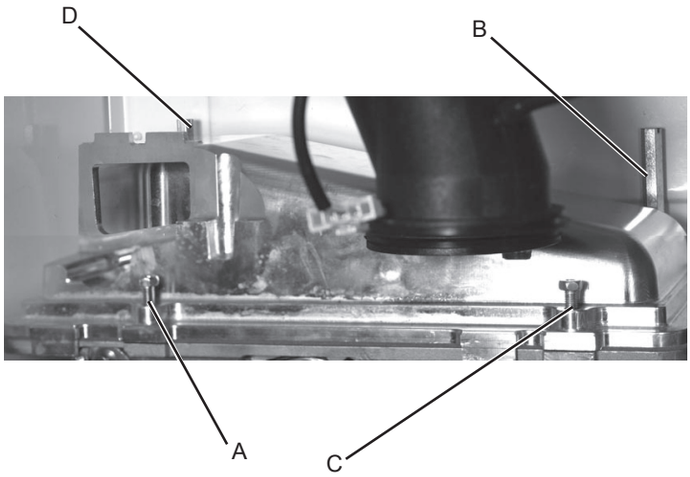

7.12 FINAL CHECKS

Turn all controls to “ON” position and check their correct functions in both DHW & CH modes.

Additional replacement of parts information can be found on our website. www.morcoproducts.co.uk

8 FAULT CODES

8.1 FAULT FINDING CHART MAIN MENU

‘L1’	GO TO SECTION 8.2 - FLOW TEMPERATURE OVERHEAT LOCKOUT
‘L2’	GO TO SECTION 8.3 - IGNITION LOCKOUT
‘LC’	5 RESETS WITHIN 15 MINS - TURN POWER OFF AND ON
‘L6’	GO TO SECTION 8.4 - FALSE FLAME LOCKOUT
‘F1’	GO TO SECTION 8.5 - LOW WATER PRESSURE
‘F2 or Fn or Ln’	GO TO SECTION 8.6 - FLAME LOSS
‘F3’	GO TO SECTION 8.7 - FAN FAULT
‘F4 or L4’	GO TO SECTION 8.8 - FLOW THERMISTOR FAULT
‘F5 or L5’	GO TO SECTION 8.9 RETURN THERMISTOR FAULT
‘F6’	GO TO SECTION 8.10 OUTSIDE SENSOR FAULT
‘F7’	LOW MAINS VOLTAGE - CONTACT ELECTRICITY PROVIDER
‘F8 or L8’	PCB UNCONFIGURED/FAULTY OR GAS VALVE SHORT CIRCUIT. IF FAULT PERSISTS REPLACE PCB
‘F9 or L9’	IF FAULT PERSISTS REPLACE PCB
‘FA’	NEGATIVE DIFFERENTIAL FLOW OR RETURN THERMISTOR FAULT
‘FU’	DIFF GREATER THAN 50°C CHECK ISOLATION VALVES ARE OPEN CHECK PUMP CHECK RAD VALVES OPEN CHECK SYSTEM BLOCKAGES
NO CH BUT HW OK	GO TO SECTION 8.11
NO HW BUT CH OK	GO TO SECTION 8.12
NO DISPLAY	GO TO SECTION 8.13

RESTART PROCEDURE: to restart boiler press the restart button.

8.2 'L1' - FLOW TEMPERATURE OVERHEAT LOCKOUT

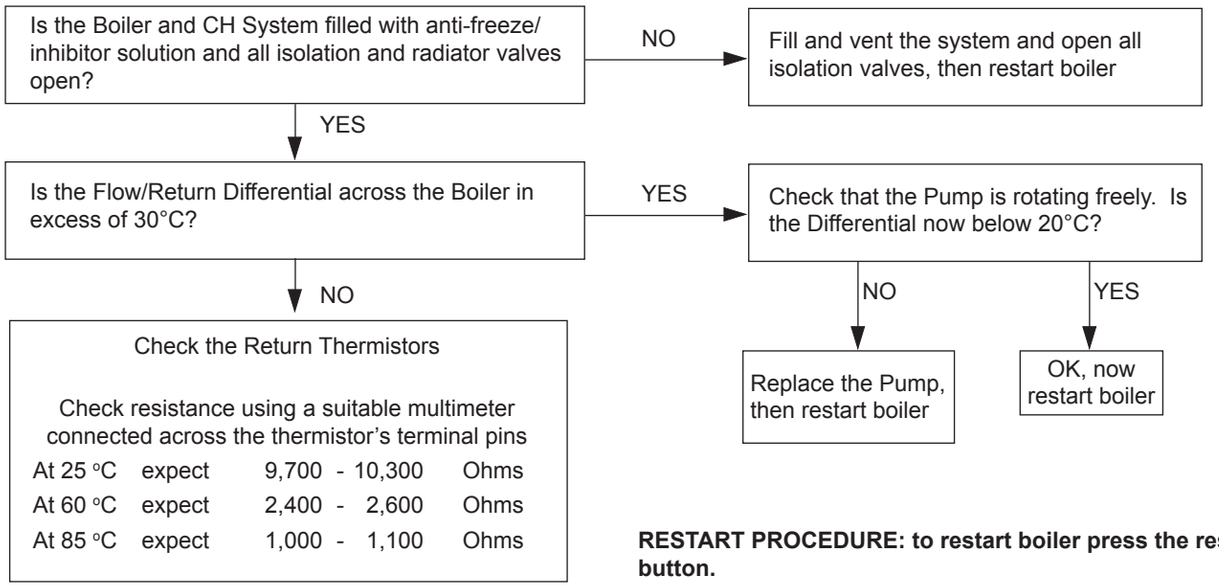

RESTART PROCEDURE: to restart boiler press the restart button.

8.3 'L2' - IGNITION LOCKOUT

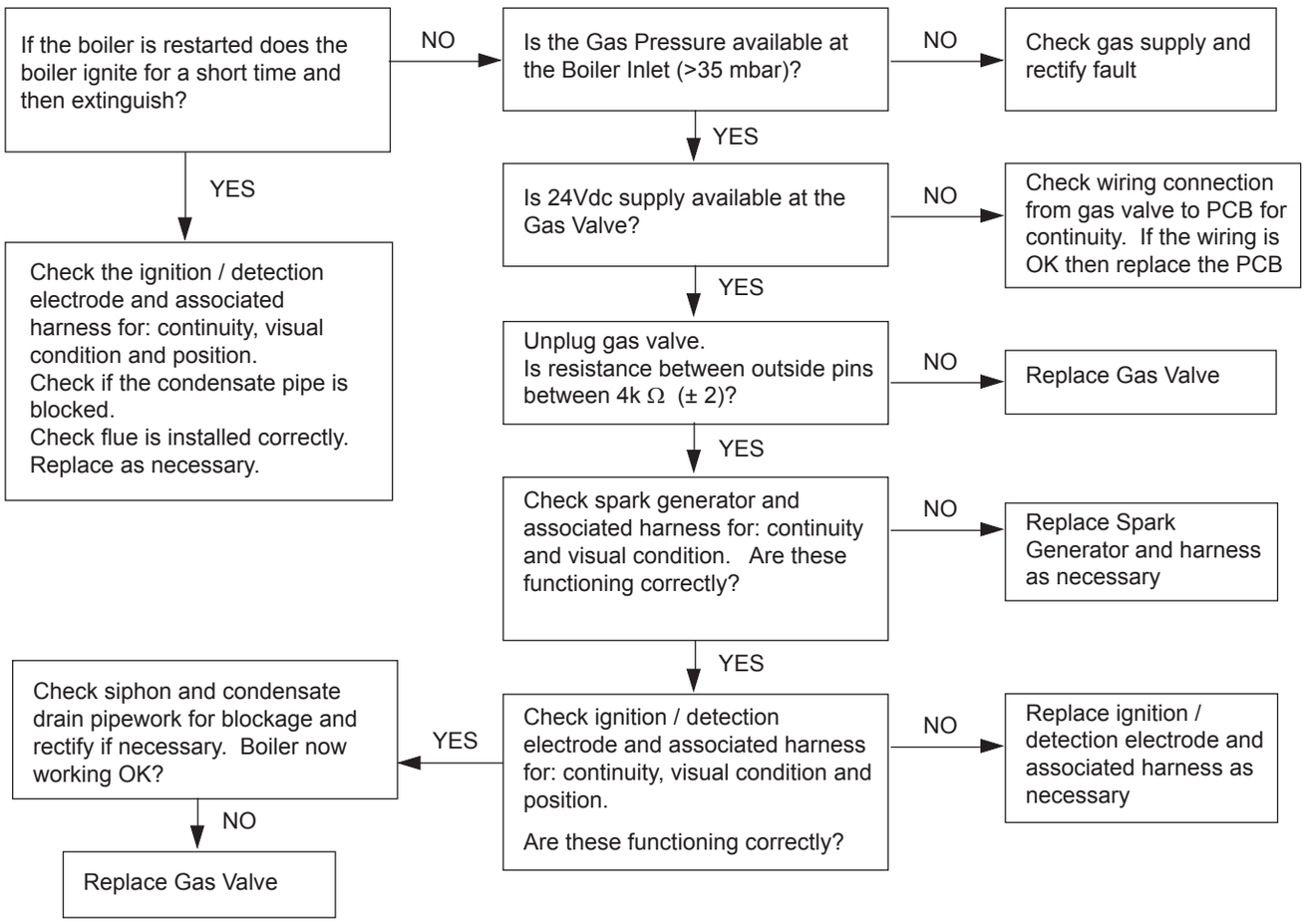

RESTART PROCEDURE: to restart boiler press the restart button.

8.4 'L6' - FALSE FLAME LOCKOUT

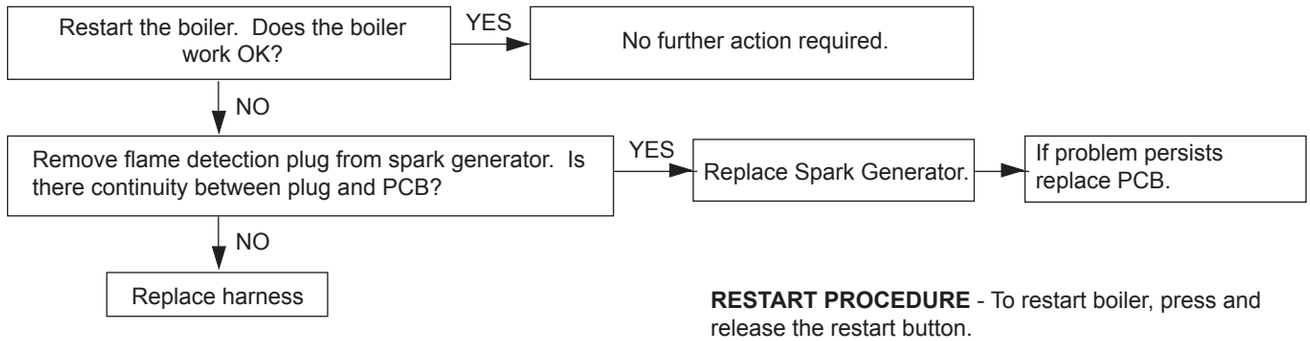

RESTART PROCEDURE - To restart boiler, press and release the restart button.

8.5 'F1' - LOW WATER PRESSURE

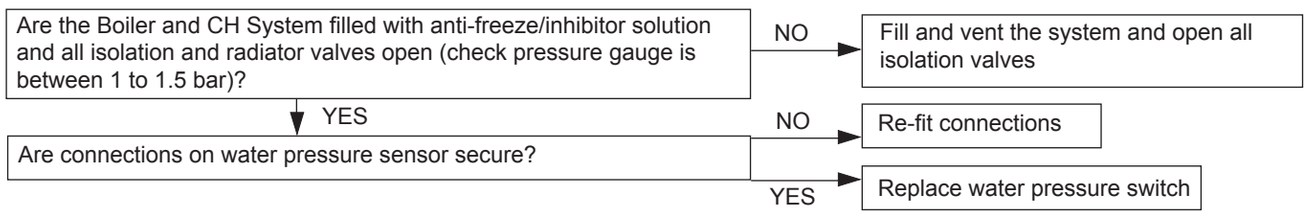

8.6 'F2 OR FN OR LN' - FLAME LOSS

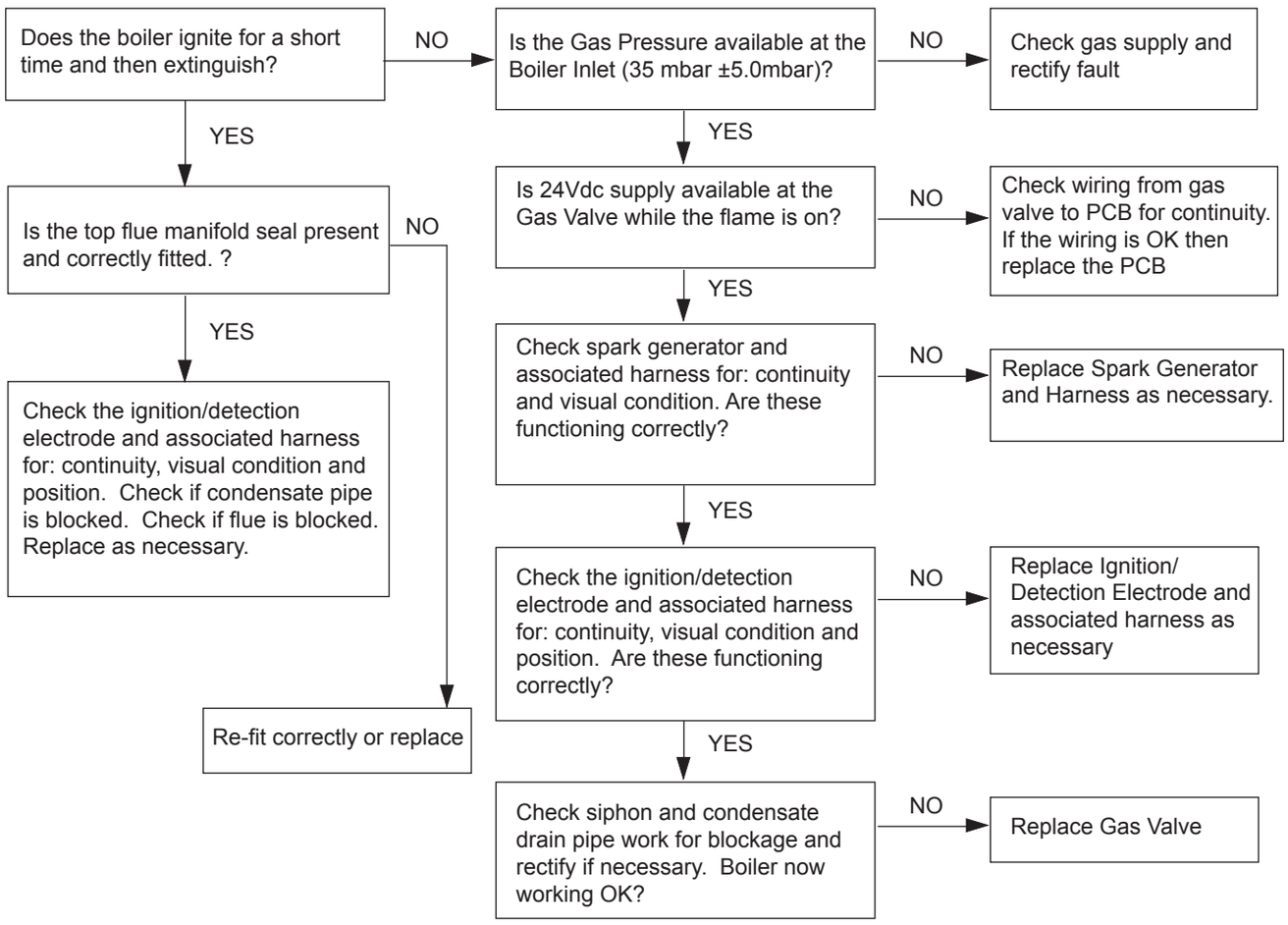

8.7 'F3' - FAN FAULT

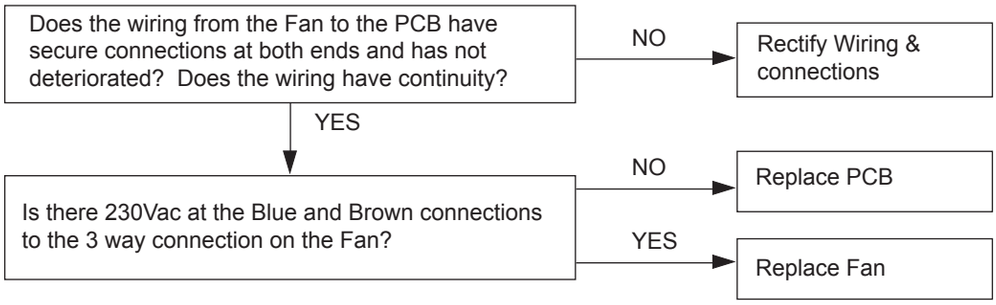

8.8 'F4 OR L4' - FLOW THERMISTOR FAULT

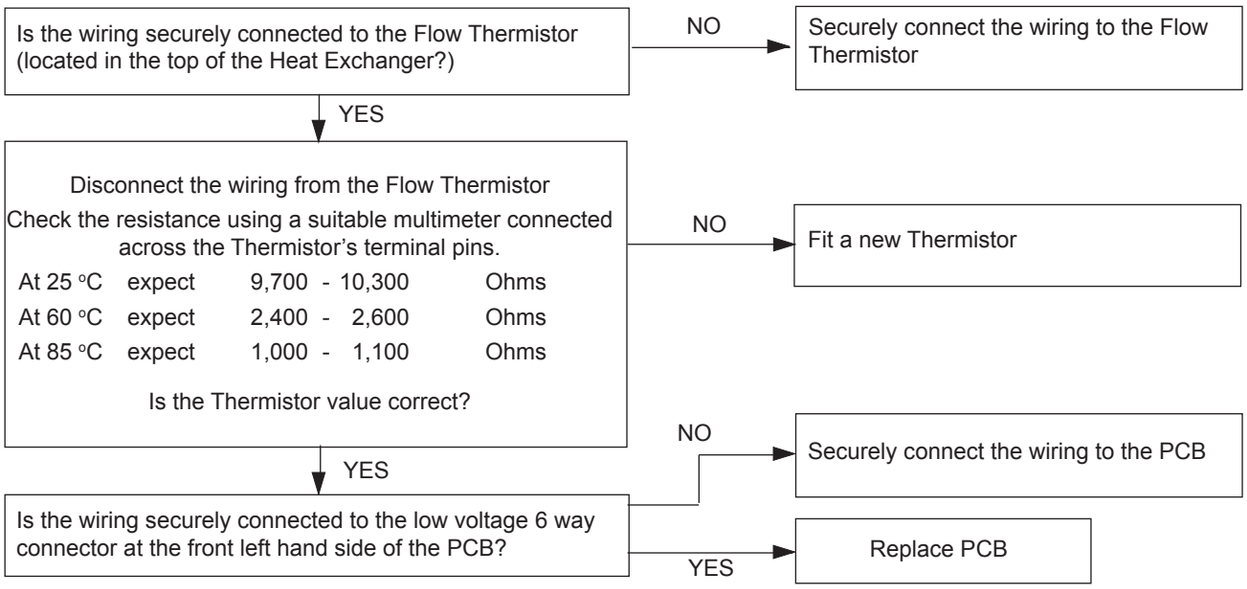

8.9 'F5 OR L5' - RETURN THERMISTOR FAULT

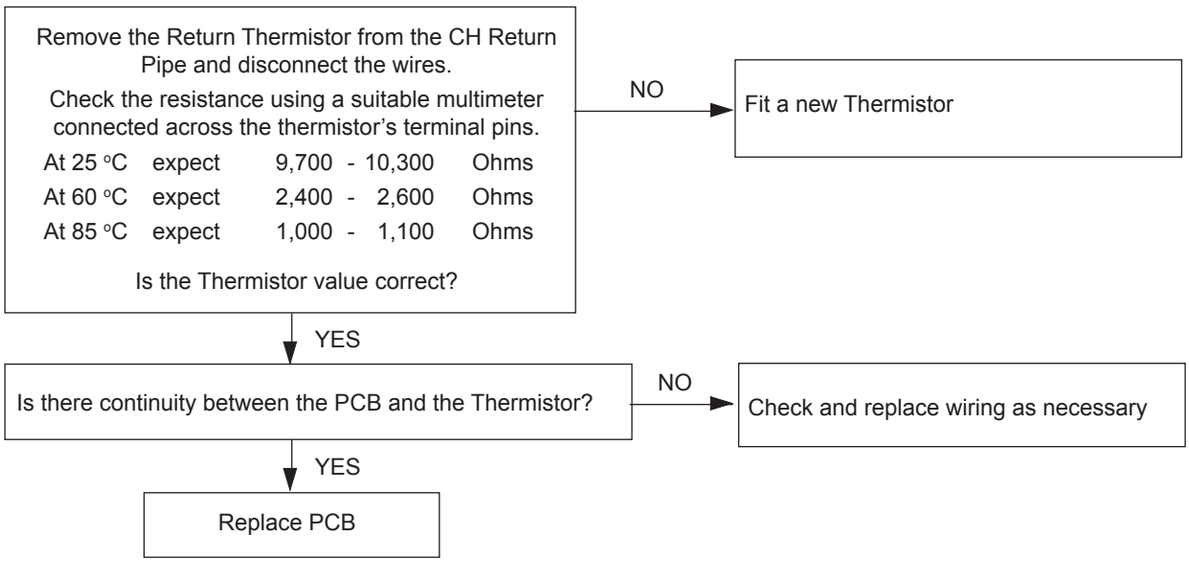

8.10 'F6' - OUTSIDE SENSOR FAULT

Is the wiring securely connected at both the boiler and Outside Sensor?

- NO → Securely connect the wiring at both the boiler and Outside Sensor
- YES ↓

Disconnect the wires to the outside sensor.
Check the resistance using a suitable multimeter connected across the Outside Sensor's terminal pins.

At 0 °C	expect	31,000 - 35,000	Ohms
At 15 °C	expect	15,000 - 16,500	Ohms
At 30 °C	expect	7,700 - 8,500	Ohms

Is the Outside Sensor value correct?

- NO → Fit a new Outside Sensor
- YES ↓

Is the wiring securely connected between the incoming terminal block boiler connection of the Outside Sensor and the PCB?

- NO → Securely connect the wiring at the Terminal Block and the PCB
- YES → Replace PCB

8.11 NO CH OPERATION BUT HW WORKS OK

Is the mode knob in the Winter position?

- NO → Move the mode knob to the Winter position
- YES ↓

Are the Timer and the Room Thermostat switched on?

- NO → Switch the Timer and Room Thermostat On
- YES ↓

Are the Radiator Valves Open?

- NO → Open the Radiator Valves
- YES ↓

Is there 230Vac at (A)?

- NO → There is no Voltage from the Timer/Room Stat. This is not boiler fault. Ensure Voltage is supplied to boiler by rectifying external wiring.
- YES ↓

Replace the Diverter Valve Motor

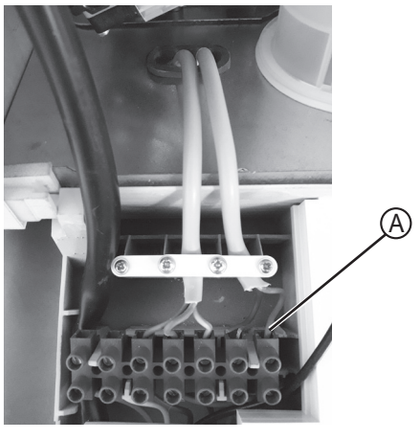

8.12 NO HW BUT CH ON

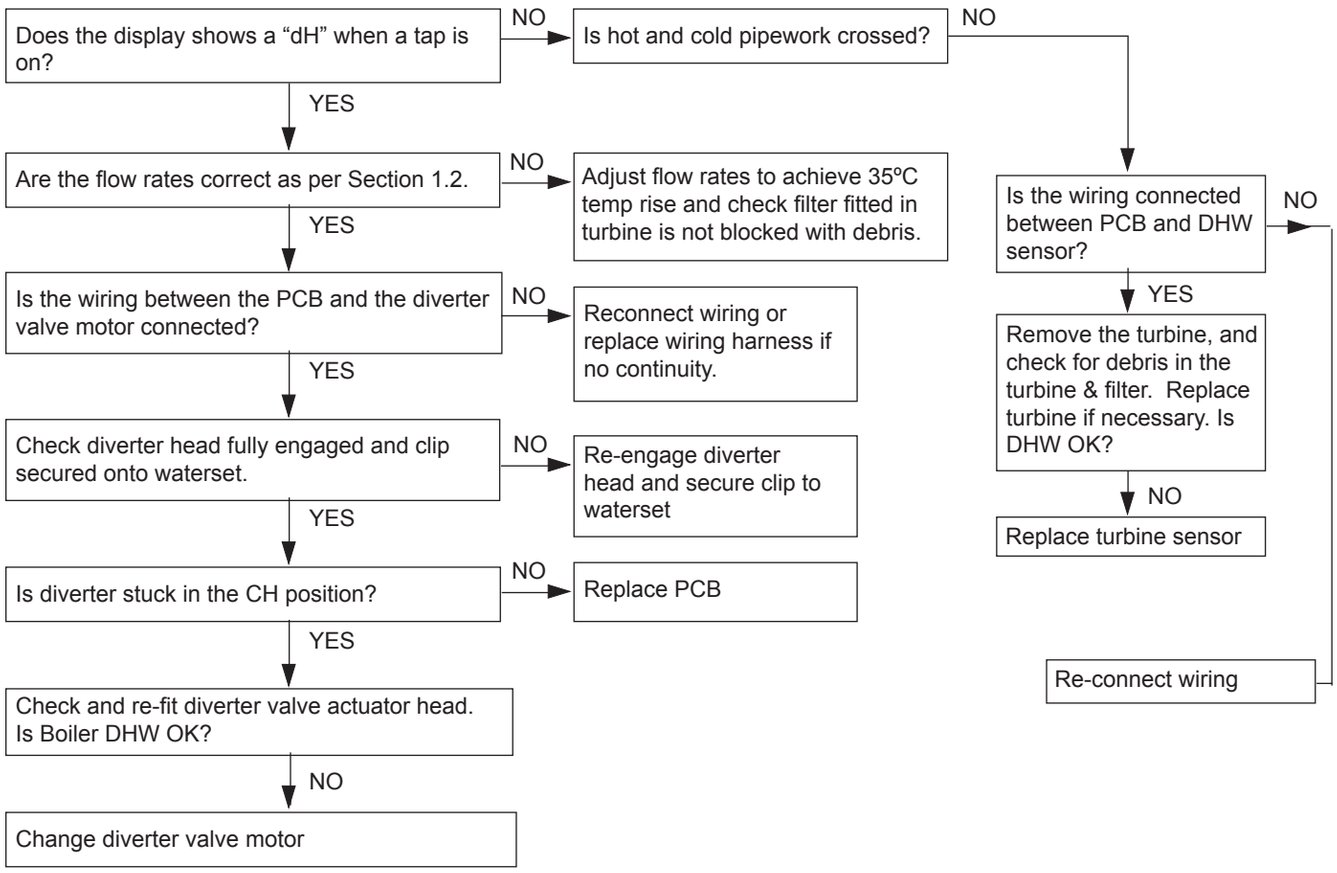

8.13 NO DISPLAY

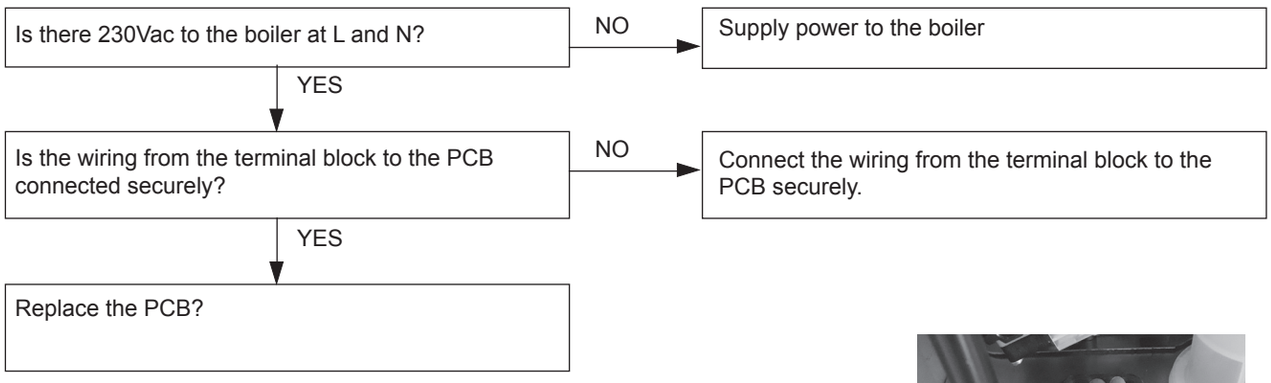

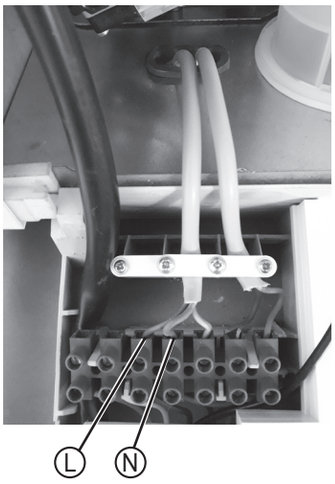

9 COMBUSTION CHECKS

FLOWCHART FOR CO LEVEL AND COMBUSTION RATIO CHECK ON COMMISSIONING A CONDENSING BOILER

Important Preliminary Information on Checks

The air gas ratio valve is factory-set and must not be adjusted DURING COMMISSIONING.

PRIOR TO CO LEVEL AND COMBUSTION RATIO CHECK

The installation instructions must have been followed, gas type verified and gas supply pressure / gas rate checked as required prior to commissioning.

As part of the installation process, ESPECIALLY WHERE A FLUE HAS BEEN FITTED BY PERSONS OTHER THAN THE BOILER INSTALLER, visually check the integrity of the whole flue system to confirm that all components are correctly assembled, fixed and supported. Check that maximum flue lengths have not been exceeded and all guidance has been followed (e.g. Gas Safe Register Technical Bulletin (TB) 008 where chimney/flues are in voids).

The ECGA should be of the correct type, as specified by BS 7967.

Prior to its use, the ECGA should have been maintained and calibrated as specified by the manufacturer. The installer must have the relevant competence for use of the analyser.

Check and zero the analyser IN FRESH AIR in accordance with the analyser manufacturer's instructions.

KEY:
CO = carbon monoxide
CO_2 = carbon dioxide
O_2 = oxygen
Combustion Ratio = The CO reading measured in ppm divided by the CO_2 reading first converted to ppm
ppm = parts per million
GS(I&U)R = Gas Safety (Installation and Use) Regulations

Setting to Maximum Rate (DHW max. gas rate, operating in CH mode):

1. Hold "restart" & "function" buttons together for more than 5s
2. Last 3 faults will be shown
3. SH shown, press "restart"
4. Burner will run for 10 minutes at maximum rate.
5. Press "restart" to exit Maximum Rate mode.

***Setting to Minimum Rate:**

1. Hold "restart" & "function" buttons together for more than 5s
2. Last 3 faults will be shown
3. SH shown, press "function" button.
4. SL shown, press "restart"
5. Burner will run for 10 minutes at minimum rate.
6. Press "restart" to exit Minimum Rate mode.

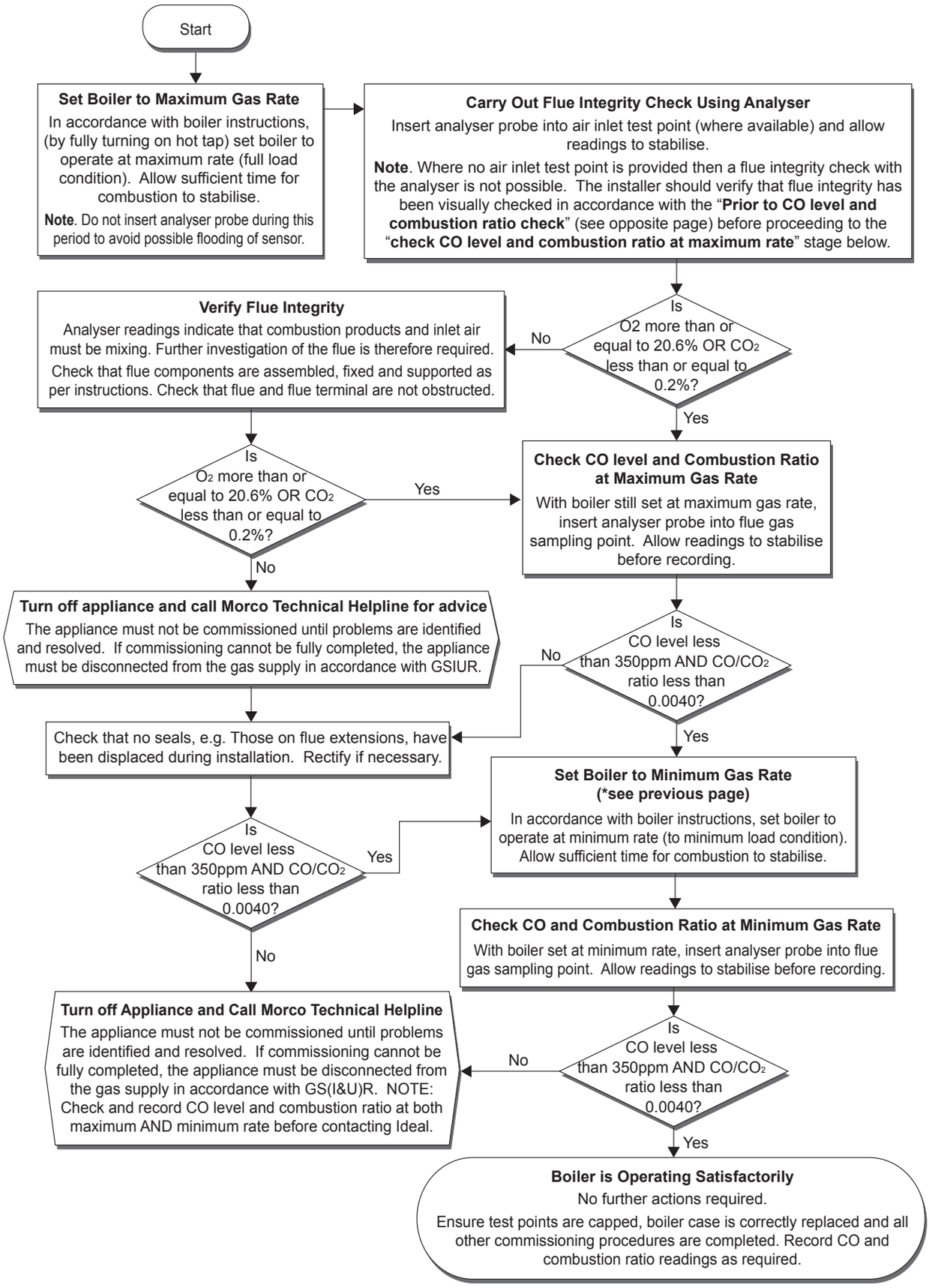
Start
Set Boiler to Maximum Gas Rate
In accordance with boiler instructions, (by fully turning on hot tap) set boiler to operate at maximum rate (full load condition). Allow sufficient time for combustion to stabilise.
Note. Do not insert analyser probe during this period to avoid possible flooding of sensor.
Carry Out Flue Integrity Check Using Analyser
Insert analyser probe into air inlet test point (where available) and allow readings to stabilise.
Note. Where no air inlet test point is provided then a flue integrity check with the analyser is not possible. The installer should verify that flue integrity has been visually checked in accordance with the "Prior to CO level and combustion ratio check" (see opposite page) before proceeding to the "check CO level and combustion ratio at maximum rate" stage below.
Is O2 more than or equal to 20.6% OR CO2 less than or equal to 0.2%?
No
Verify Flue Integrity
Analyser readings indicate that combustion products and inlet air must be mixing. Further investigation of the flue is therefore required.
Check that flue components are assembled, fixed and supported as per instructions. Check that flue and flue terminal are not obstructed.
Yes
Is O2 more than or equal to 20.6% OR CO2 less than or equal to 0.2%?
Yes
No
Check CO level and Combustion Ratio at Maximum Gas Rate
With boiler still set at maximum gas rate, insert analyser probe into flue gas sampling point. Allow readings to stabilise before recording.
Turn off appliance and call Morco Technical Helpline for advice
The appliance must not be commissioned until problems are identified and resolved. If commissioning cannot be fully completed, the appliance must be disconnected from the gas supply in accordance with GSIUR.
Is CO level less than 350ppm AND CO/CO2 ratio less than 0.0040?
No
Yes
Check that no seals, e.g. Those on flue extensions, have been displaced during installation. Rectify if necessary.
Set Boiler to Minimum Gas Rate (*see previous page)
In accordance with boiler instructions, set boiler to operate at minimum rate (to minimum load condition). Allow sufficient time for combustion to stabilise.
Is CO level less than 350ppm AND CO/CO2 ratio less than 0.0040?
Yes
No
Check CO and Combustion Ratio at Minimum Gas Rate
With boiler set at minimum rate, insert analyser probe into flue gas sampling point. Allow readings to stabilise before recording.
Turn off Appliance and Call Morco Technical Helpline
The appliance must not be commissioned until problems are identified and resolved. If commissioning cannot be fully completed, the appliance must be disconnected from the gas supply in accordance with GS(I&U)R. NOTE: Check and record CO level and combustion ratio at both maximum AND minimum rate before contacting Ideal.
Is CO level less than 350ppm AND CO/CO2 ratio less than 0.0040?
No
Yes
Boiler is Operating Satisfactorily
No further actions required.
Ensure test points are capped, boiler case is correctly replaced and all other commissioning procedures are completed. Record CO and combustion ratio readings as required.

10 WARRANTY CONDITIONS

Morco offers a 2 year parts and labour warranty on its GB24 and GB30 combination boilers, provided:

- The boiler is located in Great Britain or Northern Ireland
- The boiler has been commissioned by a Gas Safe Engineer
- The cause of the failure is not listed in our warranty exclusions section – see below
- The boiler was part of the original fitment in a new holiday home

The 2 year period of warranty is measured from the date the boiler was first commissioned by a Gas Safe Engineer. We may request a copy of the commissioning certificate.

If your boiler has stopped working, there could be a number of reasons for this. Some of these might be linked to failed components on the boiler but most of them are linked to system issues such as gas, water or air supplies to the boiler or leaks in the radiator pipes along with many other reasons. Morco wishes to make the resolution of the problem as easy and inexpensive as possible and many of the reasons boilers cease to work are covered by the fact sheets in the “troubleshooting” section of Morco’s website. These fact sheets include:

- Winterisation for Combi Boilers
- Low central heating Pressure
- Noisy Combination Boiler
- Thermostats, Programmers and TRVs
- Combi Boilers – Poor Hot Water Delivery
- Combi Boiler Cycling
- L2 Fault Code
- Frost Damage – Spare Part Identification

If you have referred to the fact sheets without success or they have advised you of the need to seek help from an engineer then you should contact whoever you purchased the holiday home from. This may be a Holiday Park or Caravan Dealer. They will ensure that the details reach the manufacturer of the home who will pass on the details to Morco. Once we have the details we will call the contact given and ensure the problem is resolved. This seems a lengthy process, but in reality it all happens very quickly.

It will help speed up the resolution if you can provide the following information: -

- Caravan serial number, make and model
- Plot no
- Boiler model – this can be found on the front cover
- Fault code being indicated on the LED panel or a description of the fault
- Site address
- Boiler serial number – this can be found on the front cover
- Commissioning date – this will be on the commissioning certificate

New Combination Boilers Fitted to Older Holiday Homes

If the boiler was retro fitted into a caravan holiday home (or similar) the Gas Safe Engineer who installed the boiler and issued the commissioning certificate must contact Morco and we will jointly arrange a resolution to the problem. The engineer will need to report the following:

- Boiler model
- Fault code or description of fault
- Site address
- Boiler serial number
- Commissioning Date

The guarantee does NOT cover the following issues:

1. Frost damage to any part of the boiler containing water during freezing conditions.
2. The removal of sludge or hard water scale due to lack of antifreeze/inhibitor
3. Damage to electronics caused by a defective electrical supply.
4. Damage or failure caused by insect contamination or blocked water filters.
5. Loss of pressure within the heating system not caused directly by the boiler.
6. Incorrect operation of the boiler caused by defective outlets such as thermostatic mixers or mono block mixer taps.
7. Damage caused by unauthorised modifications to the boiler from original specifications.
8. Blocked condensate/siphon trap and/or the heat exchanger. Cleaning this part of the boiler is integral within the routine servicing, and should be carried out with a frequency outlined within Section 7. This problem (amongst others) is identified by the fault code L2 and is often accompanied by a gurgling noise when the boiler is operational.
9. User errors, for example incorrect operation of boiler controls, room thermostat & radiator valves.
10. Installation issues, such as wrong gas type or crossed pipes.

NOTES

For more detailed servicing information, workshop manuals, technical advice, spare parts, product training, please phone us on 01482 325456 or contact us at the address below:

MORCO PRODUCTS LTD
Morco House, Riverview Road, Beverley, East Yorkshire HU17 0LD

TEL: 01482 325456 FAX: 01482 212869 EMAIL: sales@morcoproducts.co.uk
WEBSITE: www.morcoproducts.co.uk